5 DOF Force Feedback Using the 3 DOF Phantom and a 2 DOF Device

Andrew B. Mor
Robotics Institute, Carnegie Mellon University, Pittsburgh, PA
abm@ri.cmu.edu

ABSTRACT

This paper describes the development of a 5 active degree of freedom haptic interface intended for arthroscopic surgery simulation. Arthroscopic surgery is an increasingly common surgery for which more advanced training methods would prove very useful. The interface, a 2 DOF planar device which supplements a 3 degree of freedom device, can apply general forces and moments in all directions, except moments about the tool handle axis.

I. INTRODUCTION

Arthroscopic knee surgery, and arthroscopic and laporascopic procedures in general, is becoming more popular due to the effectiveness of the procedure combined with its minimization of scarring, trauma, and operating room and recovery time. The procedures are performed with the use of long slender tools, inserted into the body through small incisions in the skin and underlying membranes. Small camera lenses are inserted through other, nearby, incisions to provide visual access to the site of the operation. Because only small incisions are made, trauma to the patient is reduced when compared to conventional, open surgery. This reduction in trauma subsequently leads to reduced recovery time, allowing the patient to return to normal activity much sooner. Due to the increase in popularity of these procedures, a large number of physicians require training. Currently, training is done in one of three ways: on a plastic model, either with or without fluid; on a cadaver; or, on a patient. A virtual reality training simulator could be more realistic than the first two methods, while maintaining a higher level of patient safety than the last method mentioned.

Through conversations with surgeons and use of the current state of the art in haptic devices, it was clear that for this application, point forces would not be sufficient. During arthroscopic procedures, the shaft of the tool that the surgeon is holding passes through a portal into the patients knee, thereby limiting the motion of the device. Additionally, while an experienced surgeon might not feel any large moments on the tool during surgery, a new surgical resident will require a learning period to adjust to the constraints of the surgical setup. During this period, the resident will be more likely to unintentionally hit structures with the shaft of the tool he is holding, generating moments when measured about the tip of the tool. There are three main contributors to moments acting on the tool: the fibrous membrane that the tool shaft passes through and levers against; inadvertent contact between the shaft of the tool and structures inside the knee; and, when exploring the back compartment of the knee, pressure from the collateral ligaments.

Because these moments are very important when learning these procedures, a device that can display moments is required. Instead of designing and building a completely new device, an addition to the Phantom haptic interface was deemed most tenable, in terms of both cost and performance. A completely new device would take much longer to design and build, and given the constraints of the task domain, breaking the problem down into two parts provided simplicity: one part, the Phantom, generated the majority of the force to display to the user; the second part, the new device, generated a planar force at a point along the shaft of the tool, thereby generating a moment measured about the tip of the tool. The 2 DOF device is a planar device with a 4 DOF gimbal attached at the distal end. The gimbal allows free motion of the tool shaft around all rotational axes and along the axis of rotation of the shaft. It constrains the shaft of the tool to pass through a point on a plane. An analogy would be to view the world as a hollow cube, with the shaft of the tool constrained to pass through a point in the center of one side of the box. The tip of the tool is connected to a Phantom to measure position and apply point forces. The 2DOF device is then placed on the side of the box, and the shaft of the tool passes through the gimbal. Motion of the 2DOF device will apply moments to the shaft of the tool that will be felt by the user. In this manner, two force vectors acting on the shaft of the tool at distinct points, a force and moment are generated.

II. DEVICE DESCRIPTION

The 5 DOF consists of a 2 DOF planar device and a 3 DOF device, the Phantom. The shaft of the tool handle connected to the Phantom passes through the 4 DOF gimbal of the planar device. In this manner, the planar device can only apply forces in the plane to the shaft of the tool. When this planar force is combined with the general point force applied to the tip of the tool handle by the Phantom, a force and moment are generated.

The 2 DOF planar device is a classic five bar mechanism. The two inner links are the same length, as are the two outer links, although the inner link lengths and the outer link lengths are different. This symmetry provides for a more well conditioned and symmetric workspace. Link lengths were generated using data from [1], to provide a workspace of sufficient size based on design criteria described in the next section. Hard stops are provided to limit the inner links motion, and to allow for accurate zeroing of the motors at a known angle. A stop is also built into the outer links to keep the device from going through its singularity, when the angle between the outer links is 180 degrees.

The 4 DOF gimbal attached to the distal end of one of the outer links is designed to allow free motion of all uncontrolled degrees of freedom of the device, i.e. all motion out of the plane of the device. In that manner, the gimbal allows free rotation about all axes and translation along the tool's long axis. Two of the rotational degrees of freedom utilize simple rotational bearings, while the third rotational degree and the translation degree of freedom are enabled by a plane linear bearing, which allows both free translation and rotation.

The inner links are driven by Maxon servo motors through a tensioned cable drive. Direct drive motors were investigated, due to increases in performance through decreased static friction and inertia, but sufficient position resolution was not found to be possible. Motor choice was based on similarity to the Phantom motors, so that standard Sensable Technologies, Inc. amplifiers could be used.

III. General Design Criteria

Video tape of arthroscopic knee surgery was acquired to help determine workspace requirements. The video was analyzed to find out how much motion of the tool portal occurs during typical procedures. Angular excursions of the probe were also ascertained. The motion of the portal roughly describes a circular disk with a diameter of approximately 1", dependant on the patient. The angular excursion of the tool, with respect to the normal direction at the portal location, describes a cone with a 120 degree included angle, again, dependant on the patient.

Gear ratio is determined by the desired nominal position resolution, given 500 count encoders that are standard on Maxon motors. Nominal position has both inner links at 45 degrees from horizontal.

Interference between the device and the user's hand is also an issue. The motors of the device protrude in the direction normal to the motion of the device. With the motors pointing into the workspace, interference with the Phantom is possible. Preferable to this is to have the motors sticking out of the workspace, with possible interference with the user's hand. To minimize interference, the motors were spread as far apart as possible, to allow more clearance through the center of the device. Direct drive motors would have caused the most interference in this case, since their location can not be modified. The motors were also moved back from the plane created by the proximal ends of the inner links, again to minimize interference.

IV. Mathematics of Planar Device

The planar device is a closed chain device without simple symmetry, unlike the Phantom. Therefore, the forward kinematics and Jacobian calculations are more difficult and computationally expensive. Position of the endpoint based on motor angles is calculated through the determination of the interior angles of the device.

Referring to Figure 1, b is the horizontal distance between the proximal end of each of the two inner links and the origin of the workspace, O. l_i is the length of the ith link. θ_i is the angle of the ith link. θ_{d3} and θ_{d4} are two of the interior angles of the triangle formed by the two outer links and the line joining the distal ends of the inner links. a is the vertical distance and d is the horizontal distance between the distal ends of the inner links, while c is the shortest distance between them and θ_a is the angle between c and the horizontal, and has a negative value in Figure 1.

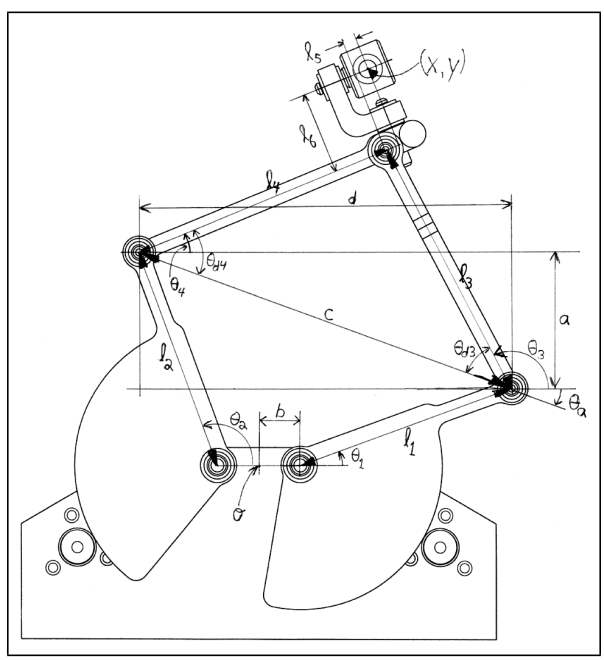

Figure 1 Schematic of planar device

Then d, a, and c are determined through simple geometry, and θ_a is the inverse tangent of a over c. θ_{d3} and θ_{d4} are calculated using the law of cosines, and then θ_3 and θ_4 are once again determined through simple geometry. The position of the endpoint of the five bar mechanism, (x, y), is then determined through geometry, where l_5 is the distance between the distal end of the outer links and the center of the gimbal along the axis of link 4. l_6 is the distance between the distal end of the outer links and the center of the gimbal normal to the axis of link 4. The Jacobian J is calculated in the usual manner to facilitate the determination of the motor toques, τ, to apply to the actuators to achieve the desired force $\vec{F_d}$. The equations described above are as follows:

$$d = 2b + l_1\cos\theta_1 - l_2\cos\theta_2 \quad \textbf{[1]}$$

$$a = l_1\sin\theta_1 - l_2\sin\theta_2 \quad \textbf{[2]}$$

$$c = \sqrt{a^2 + d^2} \quad \textbf{[3]}$$

$$\theta_a = \operatorname{atan}\frac{a}{d} \quad \textbf{[4]}$$

$$\theta_{d3} = \operatorname{acos}\frac{l_3^2 + c^2 - l_4^2}{2l_3c} \quad \textbf{[5]}$$

$$\theta_{d4} = \operatorname{acos}\frac{l_4^2 + c^2 - l_3^2}{2l_4c} \quad \textbf{[6]}$$

$$\theta_3 = \pi - \theta_{d3} + \theta_a \quad \textbf{[7]}$$

$$\theta_4 = \theta_{d4} + \theta_a \quad \textbf{[8]}$$

$$x = b + l_1\cos\theta_1 + l_3\cos\theta_3 + l_5\cos\theta_4 + l_6\cos\left(\theta_4 + \frac{\pi}{2}\right) \quad \textbf{[9]}$$

$$y = l_1\sin\theta_1 + l_3\sin\theta_3 + l_5\sin\theta_4 + l_6\sin\left(\theta_4 + \frac{\pi}{2}\right) \quad \textbf{[10]}$$

$$J = \begin{bmatrix} \frac{\partial x}{\partial\theta_1} & \frac{\partial x}{\partial\theta_2} \\ \frac{\partial y}{\partial\theta_1} & \frac{\partial y}{\partial\theta_2} \end{bmatrix} \quad \textbf{[11]}$$

$$\tau = J^T\vec{F_d} \quad \textbf{[12]}$$

Referring to Figure 2, the way in which the forces at the tip and at the point where the shaft passes through the gimbal of the planar device are generated by the following relations. $\vec{F_T}$ is the total force to be felt by the user, and $\vec{M}$ is the moment to be felt by the user.

Given the values of $\vec{M}$ and $\vec{F_T}$, and the vector $\vec{S}$ between the tip position of the tool and the linear bearing of the five bar mechanism, the forces to generate at the tip and through the collar can be determined. Let w represent the world coordinate frame where all positions and forces are measured and d be the coordinate frame of the five bar mechanism where $\hat{Z}_d$ is normal to the plane that the device moves in. Then, ${}^w\vec{P_p}$ is the position of the tip of the tool and ${}^w\vec{P_d}$ is the position of the five bar mechanism. $\vec{S}$ is the vector from the five bar mechanism position to the position of the tip of the tool, while $\hat{S}$ is the normalized direction of $\vec{S}$. Similarly, $\hat{M}$ is the normalized direction of $\vec{M}$.

First, the minimum force vector which would generate the moment $\vec{M}$, $\vec{F_d}'$, is calculated at the five bar mechanism position:

$$\vec{F_d}' = (\hat{M}\times\hat{S})\frac{|\vec{M}|}{|\vec{S}|} \quad \textbf{[13]}$$

$\vec{F_d}'$ will normally not lie in the plane defined by the five bar mechanism, but will always satisfy the moment equation, $\vec{M} = \vec{S}\times\vec{F_d}'$. It is also always perpendicular to the vector $\vec{S}$.

Next, the force $\vec{F_d}'$ is projected onto the plane of the five bar mechanism, so that the force applied by the device, $\vec{F_d}$, will also satisfy the equation $\vec{M} = \vec{S}\times\vec{F_d}$. This projection force, which is perpendicular to the force, $\vec{F_d}'$, is generated by:

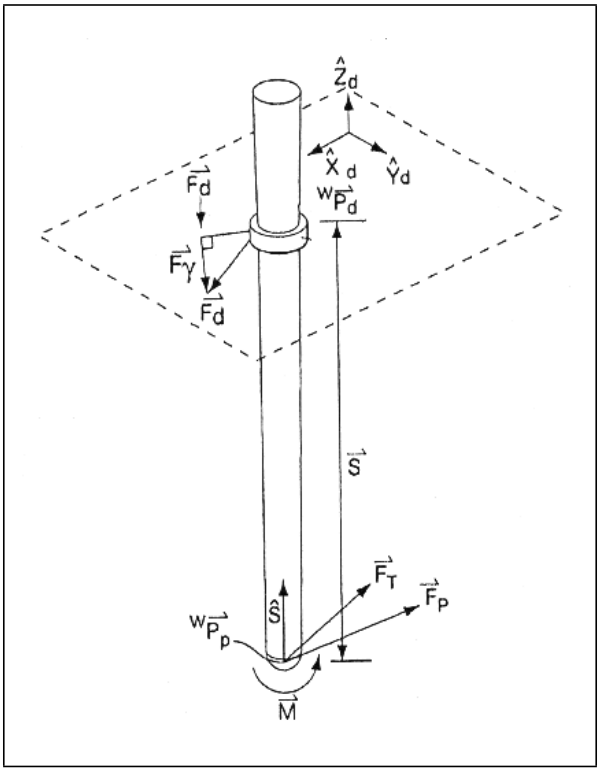

Figure 2 Device force determination

$$\vec{F_\gamma} = \left(-\frac{\hat{Z}_d \cdot \hat{F}_d'}{\hat{Z}_d \cdot \hat{S}} |\vec{F_d'}| \right) \hat{S} \qquad \textbf{[14]}$$

The force that will be generated by the five bar mechanism is the vector sum of $\vec{F_d'}$ and $\vec{F_\gamma}$:

$$\vec{F_d} = \vec{F_d'} + \vec{F_\gamma} \qquad \textbf{[15]}$$

The force applied to the tip of the tool is $\vec{F_p} = \vec{F_T} - \vec{F_d}$, to maintain the total force displayed to the user.

V. Results

Given the workspace requirements outlined above, and charts from [1], links lengths for the inner links, outer links, and spacing between the inner links were generated. The distance between the proximal ends of the inner links is 0.875”, the inner link length is 2.375”, and the outer link length is 2.813”. There is also an offset along the outer link to where the gimbal is attached, and that length is 0.150”, while the perpendicular distance from the outer link to the center of the gimbal is 0.854”. The diameter of the drum of the inner links is 1.500” and the diameter of the cable capstan is 0.360”, providing a gear ratio of 8.333. Given the above gear ratio and link lengths, the nominal position resolution is 0.0007”, or 1450 dpi. These link lengths generate a workspace with a diameter of 1.875”, which allows the planar device to be placed away from the surface of the simulated skin, allowing a phantom skin model to be physically placed within the working area of the devices to add to the realism for the user. The skin model also allows users to visually position themselves and the tool within the simulated world.

Two example applications have been implemented. The first is a simple simulation of simple geometric objects, in which the user can lever the tool between multiple objects, thereby generating large moments on the tool shaft. The other simulation is of the tip of a surgical probe interacting with a volumetric description of a knee, while the planar device servos on a point. This simulation doesn’t explicitly generate and display torques, but in the same manner as above, the two distinct forces do generate a force and moment. The planar device servoing on a point could also be viewed as similar to the force generated by the fibrous membrane surrounding the knee. Qualitative results from the second application were mixed. These mixed impressions are believed to be caused in part by most user’s unfamiliarity with the physical setup of arthroscopic surgery, where the tool passes through a portal. Results from the first demonstration application were very positive, showing the power of displaying more than a point force when interacting with complex environments.

VI. Acknowledgments

The author would like to thank the Mitsubishi Electric Research Laboratory for providing equipment and resources necessary for this research.

The author would also like to thank Dr. Scott Martin of Brigham and Women’s Hospital for his input on procedures and his feedback on the feel of the simulator, and Joseph Samosky and Michael Leventon for help in videotaping surgery and analyzing videotape.

References

[1] Hayward, V., et al., “Design and Multi-Objective Optimization of a Linkage for a Haptic Interface,” Advances in Robot Kinematics and Computational Geometry, Lenarcic, J. and Ravani, B., eds. 1994, Kluwer Academic Publishers, Netherlands.