Singularities in the Recovery of Rigid Body Motions from Optical Flow Data

Philippe A. Couvignou* and Pradeep K. Khosla

The Robotics Institute,
Carnegie Mellon University
Pittsburgh PA 15213, U.S.A.

October 1992

*Renault, Direction de la Recherche, 92500 Rueil-Malmaison, France.

Abstract

This paper addresses the problem of recovering the six-degree-of-freedom motions of a rigid body from a sequence of images. We address the mathematics of tracking several points of the rigid object, each feature point provides optical flow data in the image plane. First, we show that three feature points are not enough to avoid singularities in the process of recovering the relative motion of the rigid body with respect to the camera: we claim that, for any set of three points on a rigid object, there always exists certain positions and orientations of the object with respect to the camera, for which non-zero motions of the object cannot be detected on the image. We also show that it is sufficient to track four or more feature points, provided that the selected four points belong to the same circular cylinder and satisfy a geometric condition detailed in the paper. Once the geometric condition is satisfied, for all positions and poses of the object with respect to the camera, any motion of the object can be mathematically recovered from the optical flow data of the projections of the feature points on the image plane. We formally prove our claims by decomposing the well-established 2×6 optical flow matrix associated to every feature point, into the product of a 2×3 matrix by a 3×6 matrix.

1 Introduction

1.1 Motion recovery in vision

Tracking a moving object with a camera consists of extracting in real-time a six degree-of-freedom relative motion data from a live sequence of images; the object being tracked is assumed to be a rigid body. Tool-positioning, target sighting, road following, and obstacle avoidance are examples of vision-based tasks that rely on a robust and accurate tracking capability. Visual tracking of objects moving in the 3-D space can be performed with either a *static* camera or with a *moving* camera. In both cases, it is essential to detect and estimate the *relative* motion of the object with respect to a coordinate system attached to the camera.

A wealth of issues in visual tracking have been addressed so far: real-time image processing, automatic selection of visual features on the moving target, motion estimation and filtering, are among the most investigated issues. When the camera is moved and controlled by an actuation system (*e.g.* by a robot), we address the more general framework of *visual servoing* and additional issues are involved: image-based task specification, stability of the control loop, robustness, etc. References include [Fed91], [Fed90], [Wei87], [Cha91], [Cha90], [Jan91], [Pap91b], and [Has91], to cite only a few. The most popular method used to extract motion from a sequence of images is based on the processing of the *optical flow* data of a set of selected feature points. Before the tracking task begins, a set of *feature points* are selected on the object, either manually or automatically. Then, the tracking method consists of iterating by
– estimating the motion of the projections of the feature points, each point provides velocity data on the image plane, and,
– mapping the obtained optical flow data into a full 6-DOF motion vector which represents the *generalized velocity vector* of the relative motion between the object and the camera.

Model-based object recognition techniques are not necessary to estimate the motion of the feature points. Some tracking schemes only require the knowledge of the initial distance between the object and the camera; more advanced schemes require no prior knowledge of the object at all, by using on-line identification algorithms for example. Whether the camera is moving or not is not important because we are only interested in the 6-DOF relative motion of the (rigid) object with respect to the camera. In all cases, the relative motion of the object follows the well-known law of rigid body velocities. It follows from the application of this classical law of rigid body kinematics, recalled later in the paper, that the motion mapping is a linear mapping that can be represented by a matrix, commonly called *optical flow matrix* of the feature points.

1.2 The problem of singularities

One major problem encountered in visual tracking is the *regularity* of the *motion mapping*, *i.e.* the mapping between the 6-DOF velocity vector of the object and the optical flow data on the image plane. Depending on the number of feature points and depending on the relative

position and pose of the object, the mapping may become singular, in the sense that, a null optical flow in the image may correspond to a non-zero velocity of the object. When the mapping is singular, some motions of the object cannot be recovered from the motions of the projections of the feature points in the image plane.
It is already well-established that two feature points are not enough to recover the 6-DOF motions of a rigid object. With only two feature points, the optical flow data consists of only four numerical quantities (in pixel/second), two quantities for each feature point. Therefore, it is impossible to calculate the 6-dimensional velocity vector of the object. The linear mapping cannot be inverted. In fact, any rotation of the object around the axis passing through the two feature points leaves the two feature points motionless in the 3-D space, and thus, this rotation cannot be detected on the image.

With three feature points, six numerical quantities are obtained from the optical flow data, which make possible the existence of an inverse for the motion mapping. Unfortunately, the motion mapping can become singular with only three feature points, for some particular positions and orientations of the object with respect to the camera. Researchers in visual tracking generally use more than three feature points; redundancy in the optical flow data has been presented as a convenient solution to avoid singularities. However, the following major issues has not yet been addressed thoroughly:
How do singularities occur with three or more feature points? How many feature points are necessary to guarantee that the 6-DOF motions of the object can always *be recovered from its optical flow data, for all positions and orientations of the object with respect to the camera? Are four feature points enough, and if yes, how should they be selected?*

In this paper, we answer the above questions. First, with three feature points, there always exists some positions and orientations of the object for which non-zero motions of the object yield no motion in the image plane. In other words, the motion mapping can become singular with only three feature points. Second, with four feature points, the mapping is always regular if and only if a certain geometric condition (detailed later) is satisfied. Once this geometric condition between the four points is verified: for all positions and orientations of the object, the 6-DOF motions of the object can be recovered from the optical flow data of the four feature points.

1.3 Previous work

Chaumette [Cha90] and Papanikolopoulos [Pap91a] have attempted to find the mathematical conditions of singularity with three feature points. Papanikolopoulos studied singularities with only the 3-DOF translational motions and with three feature points. Chaumette investigated the singularities by calculating the determinant of the matrix associated with the full 6-DOF motion mapping of three feature points. Due to the complexity of the calculations, he could only exhibit particular cases of singularity. Further, the method proposed in [Cha90] does not allow to solve the general problem and find all cases of singularity. We derive the general conditions

of singularity by avoiding the computation of a determinant. In fact, we show that the 6-DOF motion mapping is the product of two less complex linear mappings whose singularities are simpler to find. In this paper, we present all the cases of singularity with three or more feature points.

In [Tom92], Tomasi uses a factorization method to recover the shape and motion of an object under the assumption of orthographic projection, and proves that the matrix associated with a discrete-time image stream has a maximum rank of 3. Although our contribution is based on factoring a matrix — the optical flow matrix — into the product of two matrices, the problem addressed in this paper is different from the problem addressed in [Tom92]. In fact, we make the assumption of inverse perspective projection so that the optical flow matrix in this paper has no common property with the shape and motion matrix in [Tom92].

2 Modeling

2.1 Rigid body motions

A cartesian coordinate system $\{\mathbf{O}, X, Y, Z\}$ is attached to the camera, with the origin $\mathbf{O}$ at the optical center and the axis $\mathbf{O}Z$ aligned with the optical axis. The camera frame is shown in Figures 1 and 2.

We consider a rigid body, named $\mathcal{B}$, moving in front of the camera, and several feature points $\mathbf{M}_i, i = 1, 2, \ldots$, that belong to $\mathcal{B}$. Because $\mathcal{B}$ is assumed to be rigid, its instantaneous motion relative to the camera is completely described by two 3-dimensional vectors: a translational velocity vector $\mathbf{t}_B$ (m/s), and a rotational velocity vector $\mathbf{w}_B$ (rad/s). In fact, the instantaneous velocity of any point $\mathbf{M}_i$ that belongs to the object $\mathcal{B}$ is given by the following relation, also known as the law of rigid body motions:

$$\dot{\mathbf{R}}_i \;=\; \mathbf{t}_B \;+\; \mathbf{w}_B \times \mathbf{R}_i, \tag{1}$$

where

$$\mathbf{R}_i = \mathbf{O}\mathbf{M}_i = \begin{pmatrix} X_i \\ Y_i \\ Z_i \end{pmatrix}, \quad \text{and} \quad \dot{\mathbf{R}}_i = \frac{d}{dt}(\mathbf{O}\mathbf{M}_i) = \begin{pmatrix} \dot{X}_i \\ \dot{Y}_i \\ \dot{Z}_i \end{pmatrix},$$

are respectively the position vector and the velocity vector of the feature point $\mathbf{M}_i$ in the 3-D space, with respect to the coordinate frame $\{\mathbf{O}, X, Y, Z\}$ of the camera.
The two vectors $\mathbf{t}_B = (t_{BX}, t_{BY}, t_{BZ})^T$ and $\mathbf{w}_B = (w_{BX}, w_{BY}, w_{BZ})^T$ are the translational and rotational parts of the 6-dimensional vector $\mathbf{T}_B = (t_{BX}, t_{BY}, t_{BZ}, w_{BX}, w_{BY}, w_{BZ})^T = \left(\mathbf{t}_B^T, \mathbf{w}_B^T\right)^T$, commonly called the *generalized velocity vector* of the rigid body $\mathcal{B}$, with respect to the camera frame. The instantaneous rigid motion of $\mathcal{B}$ described by equation (1) consists of a rotation around the axis parallel to $\mathbf{w}_B$ and passing through the origin $\mathbf{O}$, with angular speed $w_B = |\mathbf{w}_B|$ (in rad/s), and followed by a translation of vector $\mathbf{t}_B$ with translational

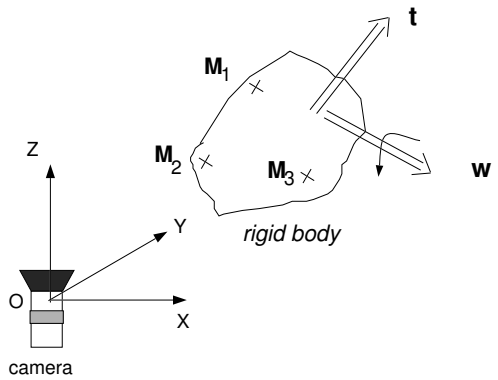

Figure 1: A rigid body $\mathcal{B}$ moving with respect to the camera coordinate frame.

speed $t_B = |\mathbf{t}_B|$ (in m/s). We recall that all velocities are relative to the camera frame. Therefore, whether or not the camera is moving with respect to a "fixed" coordinate frame, say a world coordinate frame, is irrelevant to the discussion. As explained before, our goal is to compute the generalized velocity vector $\mathbf{T}_B$, relative to the coordinate system of the camera.

By introducing the 3×6 matrix

$$\mathcal{P}_i = \begin{pmatrix} 1 & 0 & 0 & 0 & Z_i & -Y_i \\ 0 & 1 & 0 & -Z_i & 0 & X_i \\ 0 & 0 & 1 & Y_i & -X_i & 0 \end{pmatrix}, \tag{2}$$

equation (1) can be written in a more compact form:

$$\dot{\mathbf{R}}_i = \mathcal{P}_i.\mathbf{T}_B. \tag{3}$$

Because the object $\mathcal{B}$ moves with unpredictable motions in the 3-D space, its velocity vector $\mathbf{T}_B$ is unknown. Our goal is to recover $\mathbf{T}_B$ from the velocities of the projections of the points $\mathbf{M}_i$ on the image plane, or in other words, from the optical flow data of the feature points $\mathbf{M}_i$.

2.2 Projection model of the camera

We assume our camera model consists of a perspective projection with focal length f (mm) followed by a linear scaling with factor γ_x (pixel/mm) along the X-axis and γ_y (pixel/mm) along the Y-axis. The projection of any point $\mathbf{M}_i$ on the image plane will be denoted by the point $\mathbf{m}_i$ (see Figure 2). The coordinates of the image point $\mathbf{m}_i$ are related to the coordinates of the real point $\mathbf{M}_i$ by

$$x_i = \gamma_x f \frac{X_i}{Z_i} \qquad \text{and} \qquad y_i = \gamma_y f \frac{Y_i}{Z_i}\,. \tag{4}$$

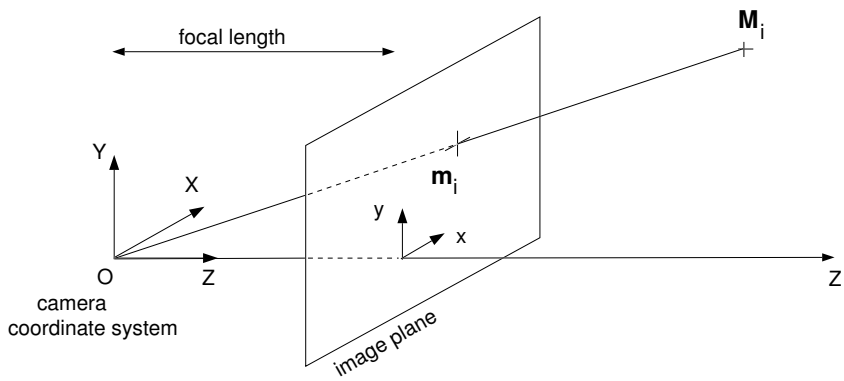

Figure 2: Camera coordinate frame and projection model.

In the image plane, the point $\mathbf{m}_i$ has a position vector $\mathbf{r}_i$ (in pixel) and a velocity vector $\dot{\mathbf{r}}_i$ (in pixel/second), given respectively by:

$$\mathbf{r}_i = \begin{pmatrix} x_i \\ y_i \end{pmatrix}, \quad \text{and} \quad \dot{\mathbf{r}}_i = \frac{d}{dt}\mathbf{r}_i = \begin{pmatrix} \dot{x}_i \\ \dot{y}_i \end{pmatrix}.$$

2.3 Optical flow equations

Taking the time-derivative of the two equations in (4) with respect to the camera frame, leads to the following relation:

$$\dot{\mathbf{r}}_i = \mathcal{Q}_i \,.\dot{\mathbf{R}}_i, \tag{5}$$

where $\mathcal{Q}_i$ is the 2×3 matrix

$$\mathcal{Q}_i = \begin{pmatrix} \gamma_x f/Z_i & 0 & -\gamma_x f X_i/Z_i^2 \\ 0 & \gamma_y f/Z_i & -\gamma_y f Y_i/Z_i^2 \end{pmatrix} = \begin{pmatrix} \gamma_x f & 0 \\ 0 & \gamma_y f \end{pmatrix} \times \begin{pmatrix} 1/Z_i & 0 & -X_i/Z_i^2 \\ 0 & 1/Z_i & -Y_i/Z_i^2 \end{pmatrix}. \tag{6}$$

We now introduce the 2×6 matrix $\mathcal{L}_i$

$$\mathcal{L}_i = \mathcal{Q}_i \mathcal{P}_i, \tag{7}$$

or more explicitly,

$$\mathcal{L}_i = \begin{pmatrix} \gamma_x f & 0 \\ 0 & \gamma_y f \end{pmatrix} \times \begin{pmatrix} 1/Z_i & 0 & -X_i/Z_i^2 & -X_i Y_i/Z_i^2 & (1 + X_i^2/Z_i^2) & -Y_i/Z_i \\ 0 & 1/Z_i & -Y_i/Z_i^2 & -(1 + Y_i^2/Z_i^2) & X_i Y_i/Z_i^2 & X_i/Z_i \end{pmatrix},$$

so that $\dot{\mathbf{R}}_i$ can be substituted between equations (3) and (5) to give:

$$\dot{\mathbf{r}}_i = \mathcal{L}_i \,.\mathbf{T}_B. \tag{8}$$

In equation (8), the 2-dimensional vector $\dot{\mathbf{r}}_i$ represents the optical flow data of the i-th feature point $\mathbf{M}_i$. The elements of the matrices $\mathcal{L}_i$ and $\mathcal{Q}_i$ depend on γ_x, γ_y, f, X_i, Y_i, and Z_i. The elements of the matrix $\mathcal{P}_i$ depend only on the coordinates X_i, Y_i, and Z_i. The knowledge of the matrix $\mathcal{L}_i$ is equivalent to the knowledge of the position vector $\mathbf{R}_i = (X_i, Y_i, Z_i)^T$ of the feature point $\mathbf{M}_i$. Because of the two equations in (4), the knowledge of the coordinates X_i, Y_i, and Z_i, is also equivalent to the knowledge of the quantities x_i, y_i, and Z_i. $\mathcal{L}_i$ is commonly called the *optical flow matrix* associated to the i-th feature point $\mathbf{M}_i$.

2.4 Combining optical flow data

It is obvious from the size of the matrix $\mathcal{L}_i$ that the 6-dimensional vector $\mathbf{T}_B$ cannot be solved exactly from only one equation like (8). At least three equations like (8) corresponding to three different feature points $\mathbf{M}_i$ are necessary.

Now, given n feature points $\mathbf{M}_i$, $i = 1, 2, \ldots, n$, with $n \geq 3$, that belong to the rigid body $\mathcal{B}$, we introduce the $2n{\times}6$ matrix $\mathcal{L}$, the $2n{\times}3n$ matrix $\mathcal{Q}$, and the $3n{\times}6$ matrix $\mathcal{P}$ as follows:

$$\mathcal{L} = \begin{pmatrix} \mathcal{L}_1 \\ \mathcal{L}_2 \\ \vdots \\ \mathcal{L}_n \end{pmatrix}, \quad \mathcal{Q} = \begin{pmatrix} \mathcal{Q}_1 & 0 & \ldots & 0 \\ 0 & \mathcal{Q}_2 & \ldots & 0 \\ \vdots & \vdots & \ddots & \vdots \\ 0 & 0 & \ldots & \mathcal{Q}_n \end{pmatrix}, \quad \mathcal{P} = \begin{pmatrix} \mathcal{P}_1 \\ \mathcal{P}_2 \\ \vdots \\ \mathcal{P}_n \end{pmatrix}. \tag{9}$$

From the definition of the n matrices $\mathcal{L}_i = \mathcal{Q}_i\mathcal{P}_i$ in equation 7, we obtain:

$$\mathcal{L} = \mathcal{Q}\mathcal{P}. \tag{10}$$

Let us combine the n image velocity vectors $\dot{\mathbf{r}}_i$, $i = 1, 2, \ldots, n$, corresponding to each image point $\mathbf{m}_i$, into the $2n$-dimensional vector

$$\dot{\mathbf{r}} = \begin{pmatrix} \dot{\mathbf{r}}_1 \\ \dot{\mathbf{r}}_2 \\ \vdots \\ \dot{\mathbf{r}}_n \end{pmatrix} = \begin{pmatrix} \dot{x}_1 \\ \dot{y}_1 \\ \vdots \\ \dot{x}_n \\ \dot{y}_n \end{pmatrix}. \tag{11}$$

The image velocity vector $\dot{\mathbf{r}}$ represents the optical flow data gathered for all image points $\mathbf{m}_i$, $i = 1, 2, \ldots, n$. Using the vector $\dot{\mathbf{r}}$ and the matrix $\mathcal{L}$, the set of equations (8) with $i = 1, 2, \ldots, n$,

can be written in the matrix–vector form

$$\mathcal{L}.\mathbf{T}_B = \dot{\mathbf{r}}. \tag{12}$$

2.5 Singularities of the motion mapping

The matrix $\mathcal{L}$, usually called the *optical flow matrix* associated with the n feature points $\mathbf{M}_i$, is the matrix of the linear mapping between the 6-dimensional space of velocity vectors $\mathbf{T}_B$ and the $2n$-dimensional space of image velocity vectors $\dot{\mathbf{r}}$:

$$\begin{array}{ccc} \mathbb{R}^6 & \xrightarrow{\mathcal{L}} & \mathbb{R}^{2n} \\ \mathbf{T}_B & \longmapsto & \dot{\mathbf{r}} \end{array}$$

The elements of $\mathcal{L}$ contain the positions of all points $\mathbf{M}_i$ of the rigid body $\mathcal{B}$. There corresponds a unique matrix $\mathcal{L}$ to each position and orientation of $\mathcal{B}$. We are interested in the invertibility of $\mathcal{L}$, so that any 6-DOF velocity vector $\mathbf{T}_B$ can be recovered uniquely from the knowledge of the optical flow vector $\dot{\mathbf{r}}$ by solving equation (12). In order to define the inverse or pseudo-inverse[1] of the matrix $\mathcal{L}$, the number of points n must be greater than or equal to 3. If $n < 3$, say $n = 2$ for example, then $\mathcal{L}$ has six columns and only four rows; therefore, $\mathcal{L}$ is necessarily singular[2] and thus, not invertible. When $n \geq 3$ and when the matrix $\mathcal{L}$ is not singular, then the inverse or pseudo-inverse of $\mathcal{L}$ exists and it is the following $6\times 2n$ matrix:

$$\mathcal{L}^+ = (\mathcal{L}^T\mathcal{L})^{-1}\mathcal{L}^T. \tag{13}$$

The 6-dimensional vector $\mathbf{T}_B^+ = \mathcal{L}^+.\dot{\mathbf{r}}$ is the best least-squares estimate of the velocity vector $\mathbf{T}_B$ that can be computed from the matrix $\mathcal{L}$ and from the optical flow vector $\dot{\mathbf{r}}$. Indeed, $\mathbf{T}_B^+$ is the solution of the minimization problem $\min ||\mathcal{L}.\mathbf{T} - \dot{\mathbf{r}}||$ with respect to $\mathbf{T} \in \mathbb{R}^6$.
If the matrix $\mathcal{L}$ is singular, then there exists non-zero rigid motions $\mathbf{T}_B$ of the rigid body $\mathcal{B}$ such that $\mathcal{L}.\mathbf{T}_B = 0$; thus, some non-zero motions of $\mathcal{B}$ cannot be detected on the image plane. In that case, the pseudo-inverse of $\mathcal{L}$ does not exist, and there exists an infinite number of solutions to equation 12.

2.6 Definition of singularity

Definition
Let $\mathbf{M}_i$, $i = 1, 2, \ldots, n$, with $n \geq 3$, be n feature points that belong to a rigid body $\mathcal{B}$. Let $\mathcal{L}$ be the $2n\times 6$ matrix defined by (9) from the coordinates X_i, Y_i, Z_i, of all points $\mathbf{M}_i$, *i.e.* from the position and orientation of the rigid body $\mathcal{B}$ with respect to the camera.

[1] Also called Moore-Penrose generalized inverse matrix.

[2] We recall that a rectangular matrix $\mathcal{A}$ is called *singular* if there exists non-zero solutions $\mathbf{x} \neq 0$ to the equation $\mathcal{A}.\mathbf{x} = 0$.

We say that the position and pose of the rigid body $\mathcal{B}$ is *singular with respect to the camera* or simply *singular*, if the associated matrix $\mathcal{L}$ is singular.

In the following sections, we show that, with three feature points $\mathbf{M}_i$, $i = 1, 2, 3$, there always exists *at least one* singular position and orientation of the rigid body $\mathcal{B}$ with respect to the camera. For any set of three points $\mathbf{M}_i$, $i = 1, 2, 3$, belonging to the rigid body $\mathcal{B}$, there always exists at least one position and pose of $\mathcal{B}$ such that the matrix $\mathcal{L}$ becomes singular. Thus, singularities can always occur with only three feature points.
Moreover, we show that, with four feature points $\mathbf{M}_i$, $i = 1, 2, 3, 4$, there exists no singular position and pose of the rigid body $\mathcal{B}$ with respect to the camera, provided that the four points $\mathbf{M}_i$, $i = 1, 2, 3, 4$, satisfy a certain geometric condition presented later. To prove this claim, we will make use of the matrix factorization $\mathcal{L} = \mathcal{Q}\mathcal{P}$.

3 Three feature points are not enough

In this section, we show that three feature points $\mathbf{M}_i$, $i = 1, 2, 3$, are not enough to guarantee that six-degree-of-freedom motions can always be recovered from optical flow data, for all positions and orientations of the rigid body $\mathcal{B}$. By this, we mean that for any set of three points $\mathbf{M}_i$, $i = 1, 2, 3$, that belong to a rigid body $\mathcal{B}$, there always exists a certain position and orientation of the rigid body $\mathcal{B}$ as well as a certain rigid motion $\mathbf{T}_B$ such that the corresponding optical flow vector $\dot{\mathbf{r}}$ is null. The optical flow vector $\dot{\mathbf{r}}$, has been introduced in equation (11), as the combination of all three velocity vectors $\dot{\mathbf{r}}_i$, $i = 1, 2, 3$, of the image points $\mathbf{m}_i$ corresponding to each point $\mathbf{M}_i$, $i = 1, 2, 3$. In simpler terms, we claim the following conjecture:

Conjecture 1
Let $\mathbf{M}_i$, $i = 1, 2, 3$, be three feature points on a rigid body $\mathcal{B}$ moving with respect to the camera. Let each point $\mathbf{m}_i$, $i = 1, 2, 3$, be defined in the image plane as the image of each corresponding feature point $\mathbf{M}_i$. Then,
There always exists at least one *singular* position and pose of the rigid body $\mathcal{B}$ with respect to the camera.

Proof of Conjecture 1
We shall provide a simple geometric proof. Three points always belong to the same plane. If they are also collinear, then any rotation of the rigid body $\mathcal{B}$ around this line keeps all three points $\mathbf{M}_i$, $i = 1, 2, 3$, motionless, *i.e.* $\dot{\mathbf{R}}_i = 0$, and consequently, their images $\mathbf{m}_i$, $i = 1, 2, 3$, do not move neither. Figure 3 illustrates the case where all three points lie on the same line.
Now, let us assume that the three points are not collinear. Let us denote by $(\mathbf{M}_1\mathbf{M}_2\mathbf{M}_3)$ the plane which contains all three points, and by $(\mathbf{M}_1\mathbf{M}_2)$ the line passing through the points $\mathbf{M}_1$ and $\mathbf{M}_2$. Let us position the object $\mathcal{B}$ such that the line $(\mathbf{M}_1\mathbf{M}_2)$ is parallel to the coordinate axis $\mathbf{O}Y$, and such that $\mathbf{M}_3$ belongs to the horizontal plane $\mathbf{O}XZ$, as illustrated by Figures 4 and 5. From this position, let us rotate the object $\mathcal{B}$ around the line $(\mathbf{M}_1\mathbf{M}_2)$ such that the line $(\mathbf{O}\mathbf{M}_3)$ becomes perpendicular to the plane $(\mathbf{M}_1\mathbf{M}_2\mathbf{M}_3)$. We claim that the obtained

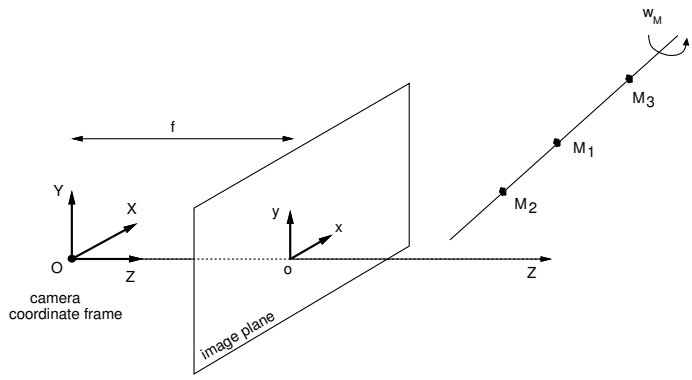

Figure 3: When all three points belong to the same line, any rotation $\mathbf{w}_B$ around the line leaves all three points motionless. Thus, this particular rigid motion cannot be detected on the image plane.

position and orientation of $\mathcal{B}$ is singular with respect to the camera. To prove it, let us consider a rotation around the line $(\mathbf{M}_1\mathbf{M}_2)$ as a particular rigid motion $\mathbf{T}_B$ of the rigid body $\mathcal{B}$. By this rigid motion, the points $\mathbf{M}_1$ and $\mathbf{M}_2$ have no velocity because they belong to the axis of rotation. Therefore their images $\mathbf{m}_1$ and $\mathbf{m}_2$ do not move neither in the image plane. As for the third point $\mathbf{M}_3$, its instantaneous velocity vector is perpendicular to the plane $(\mathbf{M}_1\mathbf{M}_2\mathbf{M}_3)$. This is due to the fact that the considered rigid motion is reduced to a single rotation around the line $(\mathbf{M}_1\mathbf{M}_2)$. Thus, the velocity vector of $\mathbf{M}_3$ is parallel to the projection line $\mathbf{OM}_3$. Therefore, the velocity vector of $\mathbf{m}_3$ in the image plane is zero. On conclusion, we found a certain position and orientation of the object $\mathcal{B}$ for which one particular rigid motion — a rotation around the line passing through two of the three points — leaves all image points $\mathbf{m}_i$, $i = 1, 2, 3$, motionless in the image plane. □

In practice, Conjecture 1 implies that three points are not enough to recover the 6-DOF velocity vector of a rigid object, for all positions and orientations with respect to the camera. Whatever the configuration of three feature points $\mathbf{M}_i$, $i = 1, 2, 3$, there always exists a particular position and orientation of the rigid body $\mathcal{B}$ such that the corresponding 6×6 optical flow matrix $\mathcal{L}$ is singular.

What about four feature points then? In the next section we prove that four points are enough provided that the feature points satisfy a certain geometric condition. Once this condition is satisfied, any non-zero velocity $\mathbf{T}_B$ of the object $\mathcal{B}$, from any position and orientation, gives a non-zero optical flow vector $\dot{\mathbf{r}}$ in the image plane. In more mathematical terms, we shall provide a necessary and sufficient condition on four feature points such that the 8×6 optical flow matrix $\mathcal{L}$ never becomes singular, whatever the position and orientation of the rigid body $\mathcal{B}$ with respect to the camera.

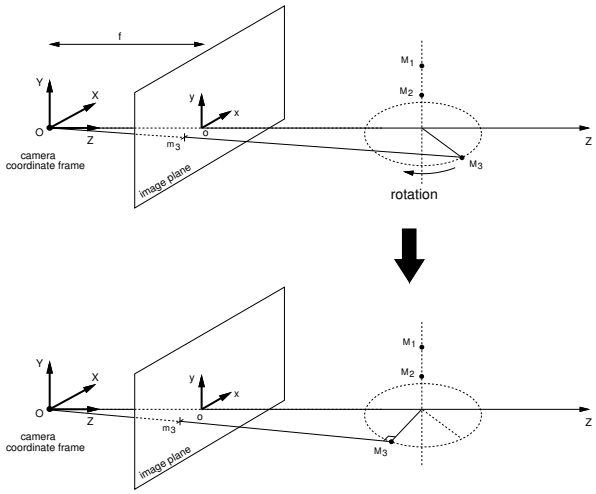

Figure 4: Positioning the rigid body $\mathcal{B}$ such that the line $(\mathbf{M}_1\mathbf{M}_2)$ is parallel to the coordinate axis $\mathbf{O}Y$, the point $\mathbf{M}_3$ belongs to the horizontal plane $(\mathbf{O}XZ)$, and the line $(\mathbf{O}\mathbf{M}_3)$ is perpendicular to the plane $(\mathbf{M}_1\mathbf{M}_2\mathbf{M}_3)$. The new position of the feature points is singular.

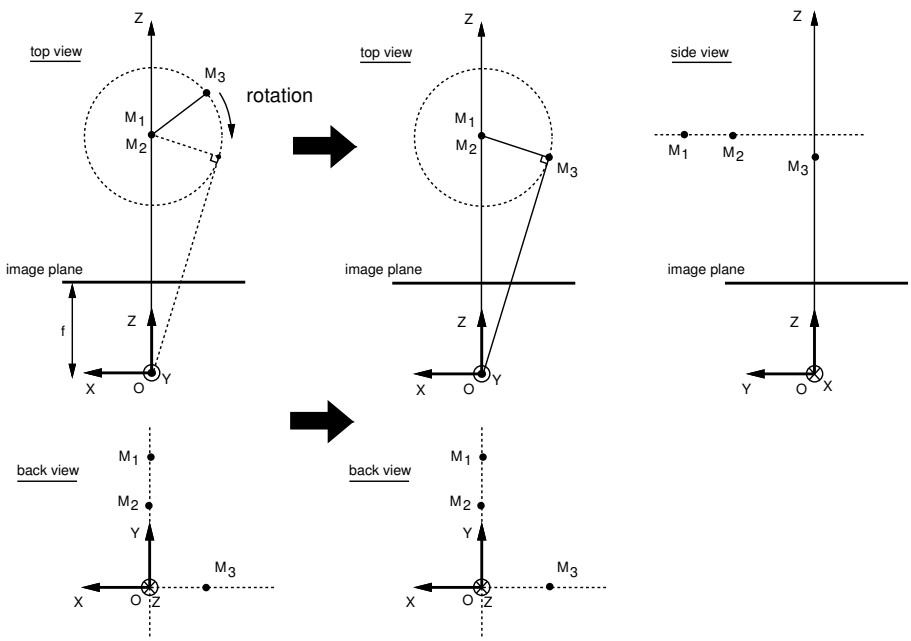

Figure 5: Top, back and side views of Figure 4.

4 Four feature points are enough

4.1 A sufficient condition to avoid singularities

In this section, we prove and discuss the following conjecture:

Conjecture 2
Let $\mathbf{M}_i$, $i = 1, 2, 3, 4$, be four feature points that belong to a rigid body $\mathcal{B}$ moving with respect to the camera. Let each point $\mathbf{m}_i$, $i = 1, 2, 3, 4$, be defined in the image plane as the image of each point $\mathbf{M}_i$. Then,
There exists no *singular* position and pose of the rigid body $\mathcal{B}$, *if* the four points $\mathbf{M}_i$ do not belong to a circular cylinder.

Remarks about Conjecture 2:
We claim that the given condition is sufficient to guarantee the regularity of the matrix $\mathcal{L}$, for all positions and orientations of the object $\mathcal{B}$. However, the given condition is not necessary. Four points that belong to the same cylinder must satisfy additional conditions in order to make possible at least one *singular* position and pose of the object $\mathcal{B}$.
Four points do not always belong to the same cylinder with circular cross-section in general. In Figure 6, we provide an example where the four points belong to the same plane, with the fourth point $\mathbf{M}_4$ inside the triangle made by the first three points $\mathbf{M}_1$, $\mathbf{M}_2$, $\mathbf{M}_3$. We claim that, in that case, there cannot exist any circular cylinder passing through the four points. We simply prove this claim by noticing that any planar section of a circular cylinder consists of either two parallel lines or consists of a general ellipse. If the four coplanar points shown in Figure 6 belonged to a circular cylinder, then they would belong to an ellipse or to a set of two parallel lines. However, because $\mathbf{M}_4$ is *inside* the triangle made by the first three points $\mathbf{M}_1$, $\mathbf{M}_2$, $\mathbf{M}_3$, there cannot exist any ellipse passing through the four points. This is due to the fact that an ellipse is a *convex* curve. For the same reason, there cannot exist two parallel lines bearing all those four points $\mathbf{M}_i$, $i = 1, 2, 3, 4$. Therefore, four feature points do not necessarily lie on the same circular cylinder.

4.2 Proof of Conjecture 2

With four feature points $\mathbf{M}_i$, $i = 1, 2, 3, 4$, the matrices $\mathcal{L}$, $\mathcal{Q}$ and $\mathcal{P}$ introduced in equation (9) are

$$\mathcal{L} = \begin{pmatrix} \mathcal{L}_1 \\ \mathcal{L}_2 \\ \mathcal{L}_3 \\ \mathcal{L}_4 \end{pmatrix}, \quad \mathcal{Q} = \begin{pmatrix} \mathcal{Q}_1 & 0 & 0 & 0 \\ 0 & \mathcal{Q}_2 & 0 & 0 \\ 0 & 0 & \mathcal{Q}_3 & 0 \\ 0 & 0 & 0 & \mathcal{Q}_4 \end{pmatrix}, \quad \mathcal{P} = \begin{pmatrix} \mathcal{P}_1 \\ \mathcal{P}_2 \\ \mathcal{P}_3 \\ \mathcal{P}_4 \end{pmatrix}.$$

The sizes of the rectangular matrices are respectively 8×6 for $\mathcal{L}$, 8×12 for $\mathcal{Q}$, and 12×6 for $\mathcal{P}$. From equation (10), we have $\mathcal{L} = \mathcal{Q}\mathcal{P}$. Whether the matrix $\mathcal{L}$ is singular or not depends on

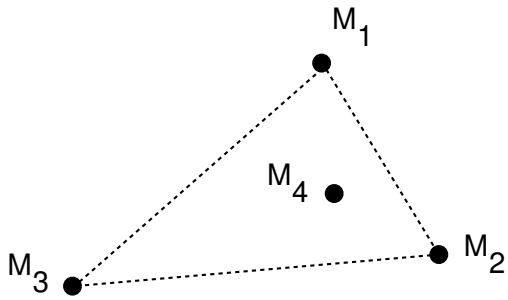

Figure 6: Example of four coplanar points: $\mathbf{M}_4$ is inside the triangle made by $\mathbf{M}_1$, $\mathbf{M}_2$, $\mathbf{M}_3$. They cannot belong to the same general ellipse or to two parallel lines. Therefore, they cannot belong to the same circular cylinder in the 3-D space.

the rank of $\mathcal{L}$. The matrix $\mathcal{L}$ is not singular if, and only if, it has full rank, which is equivalent to $\text{rank}(\mathcal{L}) = 6$. The following theorem makes it simpler to study the rank of $\mathcal{L}$.

Theorem 1
Let $\mathcal{A}$ be a $m \times p$ rectangular matrix, $\mathcal{B}$ be a $m \times n$ rectangular matrix, and $\mathcal{C}$ be a $n \times p$ rectangular matrix, with $1 < p \leq m \leq n$. Let us assume that $\mathcal{A} = \mathcal{B}\mathcal{C}$. Then,

$$\text{rank}\,(\mathcal{A}) = p \;\; \textit{if, and only if,} \quad \text{rank}(\mathcal{B}) \geq p, \; \text{rank}(\mathcal{C}) = p, \quad \text{and} \quad \text{Null}(\mathcal{B}) \cap \text{Image}(\mathcal{C}) = \{0\}.$$

Comments about Theorem 1
$\text{Null}(\mathcal{B})$ denotes the null space of the matrix $\mathcal{B}$, and $\text{Image}(\mathcal{C})$ denotes the image space of the matrix $\mathcal{C}$. We recall that the null space of a $m \times n$ rectangular matrix $\mathcal{B}$ is the subspace of vectors $\mathbf{x} \in \mathbb{R}^n$ such that $\mathcal{B}.\mathbf{x} = 0$, and the image space of a $n \times p$ matrix $\mathcal{C}$ is the subspace of vectors $\mathbf{y} \in \mathbb{R}^n$ for which there exists a vector $\mathbf{z} \in \mathbb{R}^p$ such that $\mathbf{y} = \mathcal{C}.\mathbf{z}$. The vector space $\text{Image}(\mathcal{C})$ is the subspace of $\mathbb{R}^n$ spanned by the p columns of $\mathcal{C}$. We write $\text{Span}(\mathbf{u}_1, \mathbf{u}_2, \ldots, \mathbf{u}_k)$ to denote the subspace spanned by k vectors $\mathbf{u}_i$, $i = 1, \ldots, k$. We say that a matrix is non-singular when its null space is reduced to the null vector. The rank of a matrix is equal to the dimension of its image space. For a $m \times p$ rectangular matrix, say $\mathcal{A}$, the rank of $\mathcal{A}$ is less than or equal to the lowest number m or p, *i.e.* $\text{rank}(\mathcal{A}) \leq \min(m, p)$. When $\text{rank}(\mathcal{A}) = \min(m, p)$, we shall say that $\mathcal{A}$ is of full rank. If we assume $p \leq m$, then the maximum rank of the matrix $\mathcal{A}$ is p, and a necessary and sufficient condition for $\mathcal{A}$ to be of full rank is that $\mathcal{A}$ is not singular, which means $\text{Null}(\mathcal{A}) = \{0\}$.

Proof of Theorem 1
Theorem 1 is proved in the appendix. We now use the theorem to prove Conjecture 2.

Let us apply Theorem 1 to the matrix product $\mathcal{L} = \mathcal{Q}\mathcal{P}$. The dimensions of the matrices are respectively $m = 8$, $n = 12$, and $p = 6$. First, we check that the 8×12 matrix $\mathcal{Q}$ has always full rank, *i.e.* $\text{rank}(\mathcal{Q}) = 8$. Then, we give necessary and sufficient conditions on the feature points $\mathbf{M}_i$, $i = 1, 2, 3, 4$, for having $\text{rank}(\mathcal{P}) = 6$ and $\text{Null}\,(\mathcal{Q}) \cap \text{Image}\,(\mathcal{P}) = \{0\}$.

To begin with, let us show some properties of the matrices $\mathcal{P}_i$ and $\mathcal{Q}_i$ for each point $\mathbf{M}_i$ with

position vector $\mathbf{R}_i = (X_i, Y_i, Z_i)^T$. Of course, we always assume $Z_i \neq 0$, for all $i = 1, 2, 3, 4$. We can note that the rank of each matrix $\mathcal{P}_i$ is three because its first three columns are independent (see equation 2). Similarly, the rank of each matrix $\mathcal{Q}_i$ is equal to two, because its first two columns are independent (see equation 6). In fact, the null space $\mathrm{Null}(\mathcal{Q}_i)$ is equal to the one-dimensional subspace of $\mathbb{R}^3$ spanned by the position vector $\mathbf{R}_i$:

$$\mathrm{rank}(\mathcal{P}_i) = 3, \quad \mathrm{rank}(\mathcal{Q}_i) = 2, \quad \mathrm{Null}(\mathcal{Q}_i) = \mathrm{Span}\,(\mathbf{R}_i)\,, \quad \text{for all}\, i = 1, 2, 3, 4.$$

From the block-diagonal structure of the rectangular matrix $\mathcal{Q}$, and from $\mathrm{rank}(\mathcal{Q}_i) = 2$, for all $i = 1, 2, 3, 4$, it is easy to check that the rows of the matrix $\mathcal{Q}$ are independent. Hence, the following lemma:

Lemma 1
Q has full rank — *i.e.* $\mathrm{rank}(\mathcal{Q}) = 8$.

Now, let us find a necessary and sufficient condition for the 12×6 matrix $\mathcal{P}$ to be of full rank, which means $\mathrm{rank}(\mathcal{P}) = 6$. The null space of $\mathcal{P}$ is the set of vectors $\mathbf{T} = \left(\mathbf{t}^T, \mathbf{w}^T\right)^T$ in $\mathbb{R}^6$ such that $\mathcal{P}.\mathbf{T} = 0$, or equivalently

$$\left\{\begin{array}{lcl} \mathbf{t} + \mathbf{w} \times \mathbf{R}_1 & = & 0 \\ \mathbf{t} + \mathbf{w} \times \mathbf{R}_2 & = & 0 \\ \mathbf{t} + \mathbf{w} \times \mathbf{R}_3 & = & 0 \\ \mathbf{t} + \mathbf{w} \times \mathbf{R}_4 & = & 0 \end{array}\right. \tag{14}$$

We are interested in non-trivial solutions for the vector $\mathbf{T}$, *i.e.* $\mathbf{t} \neq 0$ or $\mathbf{w} \neq 0$. Without loss of generality, we can assume $\mathbf{w} \neq 0$ because if $\mathbf{w} = 0$, then, the four equations in (14) imply $\mathbf{t} = 0$, and then $\mathbf{T} = 0$. Substituting the vector $\mathbf{t}$ in (14) leads to

$$\left\{\begin{array}{lcl} \mathbf{w} \times \mathbf{M}_1\mathbf{M}_2 & = & 0 \\ \mathbf{w} \times \mathbf{M}_1\mathbf{M}_3 & = & 0 \\ \mathbf{w} \times \mathbf{M}_1\mathbf{M}_4 & = & 0 \end{array}\right. \tag{15}$$

where $\mathbf{M}_i\mathbf{M}_j = \mathbf{R}_j - \mathbf{R}_i$. Thus, the three vectors $\mathbf{M}_1\mathbf{M}_2$, $\mathbf{M}_1\mathbf{M}_3$ and $\mathbf{M}_1\mathbf{M}_4$ are all parallel to the same vector $\mathbf{w} \neq 0$. This is equivalent to saying that the four points $\mathbf{M}_i$, $i = 1, 2, 3, 4$, are all the same or collinear.
Conversely, in the case where the feature points are all the same, *i.e.* $\mathbf{R}_1 = \mathbf{R}_2 = \mathbf{R}_3 = \mathbf{R}_4$, then $\mathbf{t} = 0$ and $\mathbf{w} = \mathbf{R}_1$ is a non-trivial solution for the vector $\mathbf{T}$ in the equation $\mathcal{P}.\mathbf{T} = 0$. In the case where $\mathbf{M}_1$, $\mathbf{M}_2$, $\mathbf{M}_3$ and $\mathbf{M}_4$ are not all the same but they all belong to the same line, then there also exists non-trivial solutions $\mathbf{T} = \left(\mathbf{t}^T, \mathbf{w}^T\right)^T \in \mathbb{R}^6$ to the set of equations in (14). In effect, the vector $\mathbf{w} \neq 0$ can be chosen parallel to the line defined by the four points $\mathbf{M}_i$, and the vector $\mathbf{t}$ can be chosen by $\mathbf{t} = -\mathbf{w} \times \mathbf{R}_i$. It is easy to verify that the four equations in (14) are satisfied by such vectors $\mathbf{w}$ and $\mathbf{t}$.
Therefore, there exists non-zero vectors $\mathbf{T}$ in $\mathrm{Null}\,(\mathcal{P})$ if, and only if, the four feature points $\mathbf{M}_i$, $i = 1, 2, 3, 4$, are collinear. When all points are equal, we can still say that they are collinear. We conclude this discussion about the rank of the matrix $\mathcal{P}$ with the following lemma:

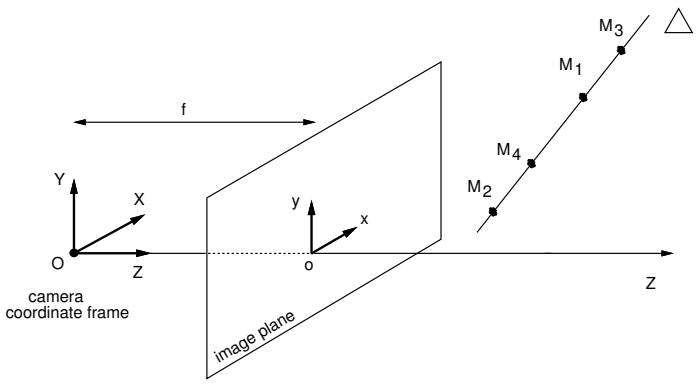

Figure 7: Particular case: when all four points are on the same line Δ. This is an obvious case of singularity.

Lemma 2
$\text{rank}(\mathcal{P}) = 6$ *if, and only if*, the four feature points $\mathbf{M}_i$, $i = 1, 2, 3, 4$, are not collinear.

Now, let us determine a necessary and sufficient condition on the four points $\mathbf{M}_i$, $i = 1, 2, 3, 4$, to guarantee that $\text{Null}(\mathcal{Q}) \cap \text{Image}(\mathcal{P}) \neq \{0\}$.
First, let us treat the trivial case where all four points belong to the same line Δ as shown in Figure 7. In this case, it is easy to verify (see Figure 8) that, if the line Δ passes through the optical center $\mathbf{O}$ of the camera, then any translation of vector $\mathbf{t} \neq 0$ (in m/s) parallel to the line Δ keeps all the image points $\mathbf{m}_i$, $i = 1, 2, 3, 4$, motionless in the image. Therefore, there exists some positions and orientations of the rigid body $\mathcal{B}$ for which there exists non-zero rigid motions $\mathbf{T}_B$ such that $\mathcal{P}.\mathbf{T}_B \neq 0$ and $\mathcal{L}.\mathbf{T}_B = 0$. Thus, there exists non-zero vectors in $\text{Null}(\mathcal{Q}) \cap \text{Image}(\mathcal{P})$ for some positions and orientations of the rigid body $\mathcal{B}$. We conclude with the particular case where all the four points are collinear by the following lemma:

Lemma 3
If the four points $\mathbf{M}_i$, $i = 1, 2, 3, 4$, belong to the same line, then there exists some positions and orientations of the rigid body $\mathcal{B}$ such that $\text{Null}(\mathcal{Q}) \cap \text{Image}(\mathcal{P}) \neq \{0\}$.

In the sequel, we shall assume that four points $\mathbf{M}_i$, $i = 1, 2, 3, 4$, are not collinear. This case is already treated by Lemma 3. We now look for all the other conditions on the four points $\mathbf{M}_i$, $i = 1, 2, 3, 4$, such that $\text{Null}(\mathcal{Q}) \cap \text{Image}(\mathcal{P}) \neq \{0\}$.
In order to characterize $\text{Null}(\mathcal{Q})$, we introduce four new vectors of $\mathbb{R}^{12}$:

$$\mathbf{R}'_1 = \begin{pmatrix} \mathbf{R}_1 \\ 0 \\ 0 \\ 0 \end{pmatrix}, \quad \mathbf{R}'_2 = \begin{pmatrix} 0 \\ \mathbf{R}_2 \\ 0 \\ 0 \end{pmatrix}, \quad \mathbf{R}'_3 = \begin{pmatrix} 0 \\ 0 \\ \mathbf{R}_3 \\ 0 \end{pmatrix}, \quad \mathbf{R}'_4 = \begin{pmatrix} 0 \\ 0 \\ 0 \\ \mathbf{R}_4 \end{pmatrix}.$$

It is easily checked that the four vectors $\mathbf{R}'_i$ are independent because $Z_i \neq 0$, and thus $\mathbf{R}_i \neq 0$ for all $i = 1, 2, 3, 4$. From the fact that $\text{Null}(\mathcal{Q}_i) = \text{Span}\,(\mathbf{R}_i)$, for all $i = 1, 2, 3, 4$, and from the

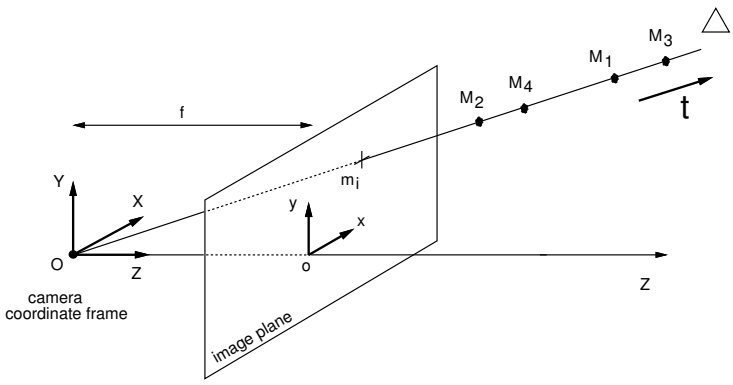

Figure 8: When all four feature points and the optical center $\mathbf{O}$ are on the same line Δ, then any translation along Δ is not detectable on the image plane.

block-diagonal structure of the matrix $\mathcal{Q}$, we have

$$\text{Null}(\mathcal{Q}) = \text{Span}\left(\mathbf{R'}_1, \mathbf{R'}_2, \mathbf{R'}_3, \mathbf{R'}_4\right).$$

We recall that

$$\text{Span}\left(\mathbf{R'}_1, \mathbf{R'}_2, \mathbf{R'}_3, \mathbf{R'}_4\right) = \{\mathbf{y} \in \mathbb{R}^{12} / \exists\, (\lambda_i)_{i=1,2,3,4} \in \mathbb{R}, \text{such that: } \mathbf{y} = \sum_{i=1}^{4} \lambda_i \mathbf{R'}_i\}.$$

Regarding the image space of the 12×6 matrix $\mathcal{P}$: Image($\mathcal{P}$) is the set of vectors $\mathbf{y} \in \mathbb{R}^{12}$ for which there exists a vector $\mathbf{T} = \left(\mathbf{t}^T, \mathbf{w}^T\right)^T \in \mathbb{R}^6$ such that $\mathbf{y} = \mathcal{P}.\mathbf{T}$. From equations (1), (2) and (3), we have: $\mathcal{P}_i.\mathbf{T} = \mathbf{t} + \mathbf{w} \times \mathbf{R}_i$, for all $i = 1,2,3,4$, and for all $\mathbf{T} \in \mathbb{R}^6$; it follows:

$$\text{Image}(\mathcal{P}) = \{\mathbf{y} \in \mathbb{R}^{12} / \exists (\mathbf{t}, \mathbf{w}) \in \mathbb{R}^3, \text{such that: } \mathbf{y} = \begin{pmatrix} \mathbf{t} + \mathbf{w} \times \mathbf{R}_1 \\ \mathbf{t} + \mathbf{w} \times \mathbf{R}_2 \\ \mathbf{t} + \mathbf{w} \times \mathbf{R}_3 \\ \mathbf{t} + \mathbf{w} \times \mathbf{R}_4 \end{pmatrix}\}.$$

Having characterized Null($\mathcal{Q}$) and Image($\mathcal{P}$), we now study the intersection Null($\mathcal{Q}$)$\cap$Image($\mathcal{P}$). There exists non-zero vectors $\mathbf{y} \in$ Null($\mathcal{Q}$) $\cap$ Image($\mathcal{P}$), if, and only if, there exists non-zero vectors $\mathbf{T} = \left(\mathbf{t}^T, \mathbf{w}^T\right)^T \in \mathbb{R}^6$, $\mathbf{t} \neq 0$ or $\mathbf{w} \neq 0$, and there exists four scalars λ_i, $i = 1,2,3,4$, with at least one $\lambda_i \neq 0$, such that

$$\begin{cases} \mathbf{t} + \mathbf{w} \times \mathbf{R}_1 &= \lambda_1 \mathbf{R}_1 \\ \mathbf{t} + \mathbf{w} \times \mathbf{R}_2 &= \lambda_2 \mathbf{R}_2 \\ \mathbf{t} + \mathbf{w} \times \mathbf{R}_3 &= \lambda_3 \mathbf{R}_3 \\ \mathbf{t} + \mathbf{w} \times \mathbf{R}_4 &= \lambda_4 \mathbf{R}_4 \end{cases} \tag{16}$$

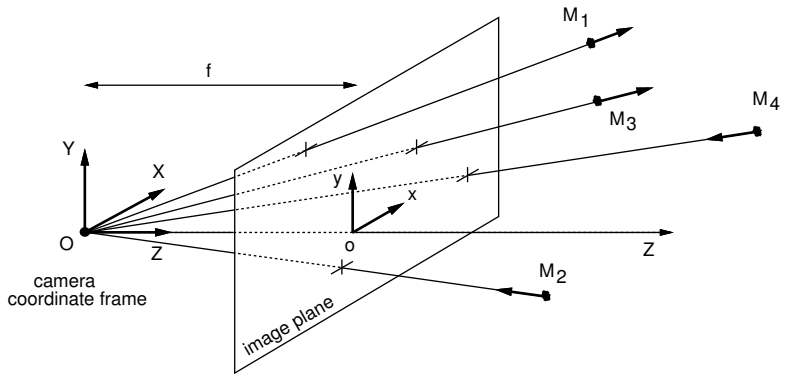

Figure 9: A flow of feature point velocities converging to the optical center $\mathbf{O}$ of the camera. The corresponding rigid motion cannot be detected on the image plane because the projections of all feature points have zero velocity in the image.

The four equations in (16) have a simple geometric interpretation. They imply that the velocity vector $\dot{\mathbf{R}}_i$ of each point $\mathbf{M}_i$ is parallel to the projection line $(\mathbf{OM}_i)$, $i = 1,2,3,4$. To put it differently, the flow of all velocity vectors $\dot{\mathbf{R}}_i$ converges to the optical center $\mathbf{O}$ of the camera, as illustrated by Figure 9.

Recalling that $\mathbf{R}_i = \mathbf{OM}_i$, $i = 1,2,3,4$, we can write (16) as follows:

$$\begin{cases} \mathbf{t} + \mathbf{w} \times \mathbf{OM}_1 &= \lambda_1 \mathbf{OM}_1 \\ \mathbf{t} + \mathbf{w} \times \mathbf{OM}_2 &= \lambda_2 \mathbf{OM}_2 \\ \mathbf{t} + \mathbf{w} \times \mathbf{OM}_3 &= \lambda_3 \mathbf{OM}_3 \\ \mathbf{t} + \mathbf{w} \times \mathbf{OM}_4 &= \lambda_4 \mathbf{OM}_4 \end{cases} \tag{17}$$

Let us assume that $\mathbf{w} = 0$. Then, we have $\mathbf{t} \neq 0$ because we assumed $\mathbf{T} \neq 0$. Thus, the four equations in (17) imply

$$\lambda_1 \, \mathbf{OM}_1 = \lambda_2 \, \mathbf{OM}_2 = \lambda_3 \, \mathbf{OM}_3 = \lambda_4 \, \mathbf{OM}_4 = \mathbf{t}.$$

Therefore all scalars λ_i are non zero, and all vectors $\mathbf{OM}_i$, $i = 1,2,3,4$, are parallel to each other. Consequently, the four points belong to the same line. However, since we have assumed that the four points are not collinear (see Lemma 3), therefore the rotation vector $\mathbf{w}$ cannot be null.

In the sequel, we shall assume that $\mathbf{w} \neq 0$. We now introduce a second theorem in order to transform the four equations in (17):

Theorem 2

Let $\mathbf{t}$ and $\mathbf{w}$ be two vectors of $\mathbb{R}^3$, and $\mathbf{O}$ be the origin of the euclidean space $\mathbb{R}^3$. Let us assume that $\mathbf{w} \neq 0$. Then,

there exists a unique vector $\mathbf{t}_w$ of $\mathbb{R}^3$, a unique scalar $\lambda \in \mathbb{R}$, and a (non-unique) point $\mathbf{C}$, such

that

$$\begin{cases} \mathbf{t}_w = \lambda \mathbf{w}, \\ \mathbf{t} + \mathbf{w} \times \mathbf{OM} = \mathbf{t}_w + \mathbf{w} \times \mathbf{CM}, \text{ for all points } \mathbf{M} \in \mathbb{R}^3. \end{cases}$$

In addition, the set of points $\mathbf{M}$ such that $\mathbf{t} + \mathbf{w} \times \mathbf{OM} = \mathbf{t}_w$ is the line Δ passing through $\mathbf{C}$ and parallel to $\mathbf{w}$. The line Δ is also the set of points $\mathbf{P}$ such that $\mathbf{t} + \mathbf{w} \times \mathbf{OM} = \mathbf{t}_w + \mathbf{w} \times \mathbf{PM}$, for all points $\mathbf{M}$ of $\mathbb{R}^3$. The line Δ is unique and commonly called *axis of rotation* of the velocity vector $\mathbf{T} = (\mathbf{t}^T, \mathbf{w}^T)^T$.

Proof of Theorem 2
Although Theorem 2 is a well-established result of equiprojective fields theory in geometry, we provide a proof in appendix for the sake of completeness.

Comments about Theorem 2
Theorem 2 explains the denomination *velocity screw vector* sometimes given to the generalized velocity vector $\mathbf{T} = (\mathbf{t}^T, \mathbf{w}^T)$ of $\mathbb{R}^6$. The theorem says that, for any velocity vector $\mathbf{T} \in \mathbb{R}^6$, there exists at least one point $\mathbf{C}$ such that the translational component $\mathbf{t}$ can be replaced by a translation vector $\mathbf{t}_w$ parallel to the rotation vector $\mathbf{w}$, provided that the point $\mathbf{O}$ is replaced by the point $\mathbf{C}$ in the vector product $\mathbf{w} \times \mathbf{OM}$. Keeping in mind that $\mathbf{T} = (\mathbf{t}^T, \mathbf{w}^T)$ represents a rigid motion, the theorem shows the existence and unicity of an axis of rotation Δ, which is the line passing through the point $\mathbf{C}$ and parallel to the rotation vector $\mathbf{w}$, such that the rigid motion corresponding to $\mathbf{T}$ is nothing more than a rotation of vector $\mathbf{w}$ around Δ followed by a translation of vector $\mathbf{t}_w$ parallel to the axis of rotation Δ.

We now apply Theorem 2 to the rigid motion $\mathbf{T} = (\mathbf{t}^T, \mathbf{w}^T)$ in the four equations in (17), where it is assumed that $\mathbf{w} \neq 0$. There exists a unique vector $\mathbf{t}_w$ parallel to $\mathbf{w}$ and a unique line Δ parallel to $\mathbf{w}$, called the axis of rotation, such that

$$\mathbf{t}_w + \mathbf{w} \times \mathbf{C}_i\mathbf{M}_i = \lambda_i \mathbf{OM}_i, \text{ for all } i = 1, 2, 3, 4, \tag{18}$$

where each point $\mathbf{C}_i$ is the orthogonal projection of $\mathbf{M}_i$, $i = 1, 2, 3, 4$, on the axis of rotation Δ. Let us define the line Δ_o as the line passing through the optical center $\mathbf{O}$ of the camera, and parallel to Δ. We also introduce the four points $\mathbf{O}_i$ as the orthogonal projections of the points $\mathbf{M}_i$ on the line Δ_o (see Figures 10 and 11). From the relations $\mathbf{OM}_i = \mathbf{OO}_i + \mathbf{O}_i\mathbf{M}_i$, $i = 1, 2, 3, 4$, and from (18), it follows

$$\mathbf{t}_w + \mathbf{w} \times \mathbf{C}_i\mathbf{M}_i = \lambda_i \mathbf{OO}_i + \lambda_i \mathbf{O}_i\mathbf{M}_i, \text{ for all } i = 1, 2, 3, 4. \tag{19}$$

In each equation in (19), the vectors $\mathbf{t}_w$ and $\lambda_i \mathbf{OO}_i$ are both parallel to the rotation vector $\mathbf{w}$, and the vectors $\mathbf{w} \times \mathbf{C}_i\mathbf{M}_i$ and $\lambda_i \mathbf{O}_i\mathbf{M}_i$ are both orthogonal to $\mathbf{w}$. Therefore, for all $i = 1, 2, 3, 4$,

$$\begin{cases} \lambda_i \mathbf{OO}_i &= \mathbf{t}_w \\ \lambda_i \mathbf{O}_i\mathbf{M}_i &= \mathbf{w} \times \mathbf{C}_i\mathbf{M}_i \end{cases} \tag{20}$$

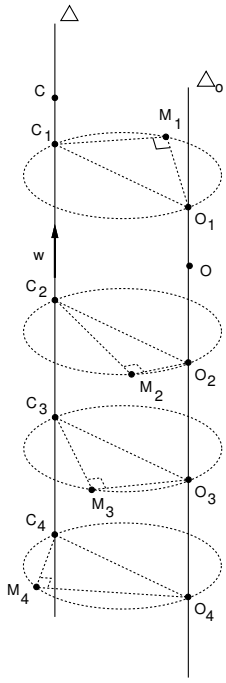

Figure 10: When all four points $\mathbf{M}_i$ belong to the same circular cylinder, we define two parallel lines Δ and Δ_o and the projection points $\mathbf{C}_i$ and $\mathbf{O}_i$ of the points $\mathbf{M}_i$, $i = 1, 2, 3, 4$. Δ_o is parallel to the axis of the cylinder and passes through the optical center $\mathbf{O}$ of the camera. The lines Δ and Δ_o are parallel to each other, on opposite sides of the cylinder.

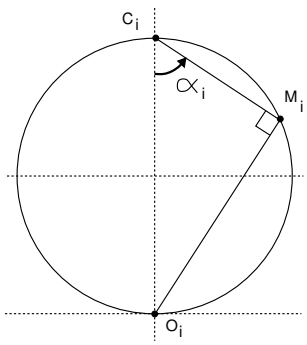

Figure 11: In the plane $(\mathbf{O}_i\mathbf{M}_i\mathbf{C}_i)$, definition of the angle α_i between the two vectors $\mathbf{C}_i\mathbf{O}_i$ and $\mathbf{C}_i\mathbf{M}_i$.

After multiplication by $\mathbf{w}/|\mathbf{w}|^2$ of both sides of the second equation in (20), we obtain[3]

$$\begin{cases} \lambda_i \mathbf{O}\mathbf{O}_i &= \mathbf{t}_w \\ \\ \mathbf{C}_i\mathbf{M}_i &= \dfrac{\lambda_i}{\mathbf{w}^2}\,\mathbf{O}_i\mathbf{M}_i \times \mathbf{w} \end{cases} \tag{21}$$

The relations in (20) and (21) are strictly equivalent because $\mathbf{w} \neq 0$, and because the vectors $\mathbf{O}_i\mathbf{M}_i$ and $\mathbf{C}_i\mathbf{M}_i$ are both orthogonal to $\mathbf{w}$.
It follows from (21) that the vectors $\mathbf{O}_i\mathbf{M}_i$ and $\mathbf{C}_i\mathbf{M}_i$ are orthogonal to each other, for all $i = 1,2,3,4$. Therefore, each point $\mathbf{M}_i$ belongs to the circle of diameter $[\mathbf{O}_i, \mathbf{C}_i]$ in a plane perpendicular to the line Δ (see Figures 10 and 11). It follows that the four feature points $\mathbf{M}_i$ and the origin $\mathbf{O}$ belong to the same circular cylinder. The axis of the cylinder is the line parallel to the lines Δ and Δ_o, which passes in the middle of Δ and Δ_o.

In the particular case where the translation component is zero, *i.e.* $\mathbf{t}_w = 0$, then, we obtain from the equations in (21): $\lambda_i = 0$ or $\mathbf{O}_i = \mathbf{O}$, for all $i = 1,2,3,4$,. If one scalar λ_i is zero, say $\lambda_1 = 0$ for example, then $\mathbf{O}_1 = \mathbf{C}_1 = \mathbf{M}_1$ which means that $\mathbf{M}_1$ belongs to the axis of rotation Δ. Thus, when $\mathbf{t}_w = 0$, then all the points $\mathbf{M}_i$, $i = 1,2,3,4$, belong to the line Δ or to the circle passing through $\mathbf{O}$, crossing Δ, and in the plane perpendicular to Δ. For example, if $\lambda_1 = \lambda_4 = 0$, $\lambda_2 \neq 0$, and $\lambda_3 \neq 0$, the two points $\mathbf{M}_1$ and $\mathbf{M}_4$ belong to the axis of rotation Δ, and the two points $\mathbf{M}_2$ and $\mathbf{M}_3$ are in the same plane with $\mathbf{O}$, as shown on Figure 12.
In the case where $\mathbf{t}_w \neq 0$, then, from the equations in (21), $\lambda_i \neq 0$ and $\mathbf{O}_i \neq \mathbf{O}$, for all $i = 1,2,3,4$. It follows that $\mathbf{C}_i \neq \mathbf{M}_i$ and $\mathbf{O}_i \neq \mathbf{M}_i$, for all $i = 1,2,3,4$.

We have showed that if $\mathrm{Null}(\mathcal{Q}) \cap \mathrm{Image}(\mathcal{P}) \neq \{0\}$, then the four points $\mathbf{M}_i$, $i = 1,2,3,4$, are collinear, *or* the four points $\mathbf{M}_i$ belong to the same circular cylinder. However, the case where all four feature points $\mathbf{M}_i$, $i = 1,2,3,4$, are collinear can be seen as a particular case of the case where all four points $\mathbf{M}_i$ belong to one edge of a circular cylinder. Therefore, the following lemma:

Lemma 4
If $\mathrm{Null}(\mathcal{Q}) \cap \mathrm{Image}(\mathcal{P}) \neq \{0\}$, then the four points $\mathbf{M}_i$, $i = 1,2,3,4$, belong to the same circular cylinder.

We can now conclude the proof of Conjecture 2 by using Lemma 1, Lemma 2, Lemma 3, Lemma 4, and Theorem 1: if the matrix $\mathcal{L}$ is singular, then the four feature points $\mathbf{M}_i$, $i = 1,2,3,4$, belong to the same circular cylinder. Equivalently, the matrix $\mathcal{L}$ cannot become singular if all four points $\mathbf{M}_i$, $i = 1,2,3,4$, do not belong to the same circular cylinder. □

[3] Recall that for any set of three vectors $\mathbf{u}$, $\mathbf{v}$, and $\mathbf{w}$ in $\mathbb{R}^3$: $(\mathbf{u} \times \mathbf{v}) \times \mathbf{w} = \mathbf{v}^T\mathbf{w}.\mathbf{u} - \mathbf{u}^T\mathbf{w}.\mathbf{v}$.

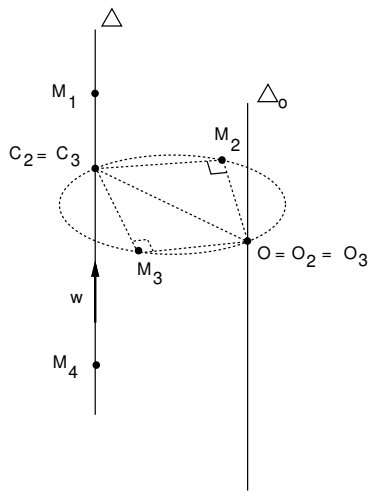

Figure 12: Particular case where all four points $\mathbf{M}_i$ belong to the same circular cylinder and with $\lambda_1 = \lambda_4 = 0$, $\lambda_2 \neq 0$, and $\lambda_3 \neq 0$: then, the points $\mathbf{M}_1$ and $\mathbf{M}_4$ belong to the axis of rotation Δ, and the two points $\mathbf{M}_2$ and $\mathbf{M}_3$ are in the same plane with the optical center $\mathbf{O}$ of the camera. Any rotation around Δ gives zero velocities in the image plane, for all feature points $\mathbf{M}_i$, $i = 1, 2, 3, 4$.

4.3 A necessary and sufficient condition to avoid singularities

In the proof of Conjecture 2, the existence of two parallel vectors $\mathbf{w} \neq 0$ and $\mathbf{t}_w$, and four scalars λ_i, $i = 1, 2, 3, 4$, with at least one $\lambda_i \neq 0$, such that the relations in (21) are satisfied, is not only a necessary condition but is also a sufficient condition for having $\mathrm{Null}(\mathcal{Q}) \cap \mathrm{Image}(\mathcal{P}) \neq \{0\}$. In this section, we aim at simplifying this condition.

Let us define an orientation on the lines Δ_o and Δ, for example, the same orientation with respect to the vector $\mathbf{w}$. Following this orientation, a signed scalar value $\overline{\mathbf{OO}_i}$ is associated to each vector $\mathbf{OO}_i$, which is parallel to the lines Δ_o and Δ. We also define four angles α_i (rad) corresponding to each point $\mathbf{M}_i$, $i = 1, 2, 3, 4$, as in Figure 11: α_i is the angle between the vectors $\mathbf{C}_i\mathbf{O}_i$ and $\mathbf{C}_i\mathbf{M}_i$, with $\alpha_i = 0$ if $\mathbf{M}_i = \mathbf{O}_i$, and $\alpha_i = \pi/2$ if $\mathbf{M}_i = \mathbf{C}_i$. By definition, we have: $-\pi/2 < \alpha_i \leq \pi/2$, for all $i = 1, 2, 3, 4$. It must be noted that $|\tan \alpha_i| = |\mathbf{O}_i\mathbf{M}_i|/|\mathbf{C}_i\mathbf{M}_i|$, for all $i = 1, 2, 3, 4$. It follows from the two relations in (21) that the ratio $\overline{\mathbf{OO}_i}/\tan \alpha_i$ is constant for all $i = 1, 2, 3, 4$,.
Consequently, there exists two parallel vectors $\mathbf{w} \neq 0$ and $\mathbf{t}_w$, and four scalars λ_i, $i = 1, 2, 3, 4$, with at least one $\lambda_i \neq 0$, such that (21), *if, and only if,*

$$\exists k \in \mathbb{R}, \text{ such that: } \frac{\overline{\mathbf{OO}_1}}{\tan \alpha_1} = \frac{\overline{\mathbf{OO}_2}}{\tan \alpha_2} = \frac{\overline{\mathbf{OO}_3}}{\tan \alpha_3} = \frac{\overline{\mathbf{OO}_4}}{\tan \alpha_4} = k, \tag{22}$$

with the following conventions for the relation (22):

- if $k = \pm\infty$ then $\alpha_i = 0$, for all $i = 1,2,3,4$. It follows that $\mathbf{M}_i = \mathbf{O}_i = \mathbf{C}_i$, for all $i = 1,2,3,4$, which means that all four points $\mathbf{M}_i$ and the point $\mathbf{O}$ belong to the same line Δ.
- if $k = 0$ then $\alpha_i = \pi/2$ or $\mathbf{O} = \mathbf{O}_i$, for all $i = 1,2,3,4$. The case $\alpha_i = \pi/2$ corresponds to $\mathbf{M}_i \in \Delta$.

The particular case where all four points $\mathbf{M}_i$ are collinear is treated by the relation (22). Therefore, (22) is a necessary and sufficient condition for having $\mathrm{Null}(\mathcal{Q}) \cap \mathrm{Image}(\mathcal{P}) \neq \{0\}$.

Conjecture 3
Let $\mathbf{M}_i$, $i = 1,2,3,4$, be four feature points on a rigid body $\mathcal{B}$ moving with respect to the camera. Let each point $\mathbf{m}_i$, $i = 1,2,3,4$, be defined in the image plane as the image of each corresponding feature point $\mathbf{M}_i$. Then,
A position and pose of the rigid body $\mathcal{B}$ is *singular* with respect to the camera *if, and only if*
(i) – the four points $\mathbf{M}_i$ and the optical center of the camera $\mathbf{O}$, belong to a circular cylinder, and,
(ii) – the relation (22) is satisfied.

Remarks about Conjecture 3
Conjecture 3 is not only valid with four feature points: it can be applied for any number $n \geq 3$ of feature points. The proof of the conjecture is strictly the same for $n = 3$, $n = 4$ or $n > 4$.
The conditions (i) and (ii) are independent of the camera parameters γ_x, γ_y and f introduced in Section 2.2.
Analytically, it is very difficult to check whether or not four given points $\mathbf{M}_i$, $i = 1,2,3,4$, belong to the same circular cylinder. However, Conjecture 3 is useful for providing numerical examples which are singular. For example:

$$\mathbf{OM}_1 = \begin{pmatrix} -1 \\ 1 \\ 1 \end{pmatrix}, \quad \mathbf{OM}_2 = \begin{pmatrix} 1 \\ -1 \\ 1 \end{pmatrix}, \quad \mathbf{OM}_3 = \begin{pmatrix} -1/2 \\ 2-\sqrt{3} \\ (2-\sqrt{3})/2 \end{pmatrix}, \quad \mathbf{OM}_4 = \begin{pmatrix} -1/2 \\ 2+\sqrt{3} \\ (2+\sqrt{3})/2 \end{pmatrix}.$$

The four feature points $\mathbf{M}_i$ belong to the same circular cylinder of radius 1, whose axis is parallel to the coordinate axis $\mathbf{O}Y$ and which passes through the point of coordinates $(0,0,1)^T$. This cylinder has the following cartesian equation:

$$X^2 + (Z-1)^2 = 1.$$

The line Δ_o is the coordinate axis $\mathbf{O}Y$. The line Δ is parallel to $\mathbf{O}Y$ and passes through the point of coordinates $(0,0,2)^T$. The angles α_i associated to each point $\mathbf{M}_i$ are $\alpha_1 = \pi/4$, $\alpha_2 = -\pi/4$, $\alpha_3 = \pi/6$, and $\alpha_4 = 5\pi/12$. The condition (22) is satisfied with $k = 1$.
Without loss of generality, we can assume $\gamma_x = \gamma_y = f = 1$; the matrix $\mathcal{L}$ that corresponds to

the points $\mathbf{M}_1$, $\mathbf{M}_2$, $\mathbf{M}_3$, and $\mathbf{M}_4$, is the following 8×6 matrix:

$$\mathcal{L} = \begin{pmatrix} 1 & 0 & 1 & 1 & 2 & -1 \\ 0 & 1 & -1 & -2 & -1 & -1 \\ 1 & 0 & -1 & 1 & 2 & 1 \\ 0 & 1 & 1 & -2 & -1 & 1 \\ 2/(2-\sqrt{3}) & 0 & 2/(2-\sqrt{3})^2 & 2/(2-\sqrt{3}) & 4/(2-\sqrt{3}) & -2 \\ 0 & 2/(2-\sqrt{3}) & -4/(2-\sqrt{3}) & -5 & -2/(2-\sqrt{3}) & -1/(2-\sqrt{3}) \\ 2/(2+\sqrt{3}) & 0 & 2/(2+\sqrt{3})^2 & 2/(2+\sqrt{3}) & 4/(2+\sqrt{3}) & -2 \\ 0 & 2/(2+\sqrt{3}) & -4/(2+\sqrt{3}) & -5 & -2/(2+\sqrt{3}) & -1/(2+\sqrt{3}) \end{pmatrix}.$$

It is easily verified that the vector:

$$\mathbf{T} = (\mathbf{t}^T, \mathbf{w}^T)^T = (-2, 1, 0, 0, 1, 0)^T$$

is a non-zero velocity vector such that $\mathcal{L}.\mathbf{T} = 0$. Therefore, the matrix $\mathcal{L}$ is singular. In fact, we have $\mathbf{t} + \mathbf{w} \times \mathbf{OM}_i = \lambda_i \mathbf{OM}_i$, for all $i = 1, 2, 3, 4$, with $\lambda_1 = 1, \lambda_2 = -1, \lambda_3 = 2 + \sqrt{3}$, and $\lambda_4 = 2 - \sqrt{3}$. The velocity vector $\mathbf{T}$ represents a rotation around the axis Δ — with $|\mathbf{w}| = 1$ rad/s — followed by a translation parallel to Δ — with $|\mathbf{t}_w| = 1$ m/s.

5 Summary

In this paper, we address the issue of recovering the six-degree-of-freedom motions of a rigid object from the optical flow data of a set of $n \geq 3$ feature points. We show that three points on a rigid body are not enough to guarantee that six-degree-of-freedom rigid motions can be recovered uniquely from any position and orientation of the rigid body. With three feature points, there always exists at least one particular position and pose of the rigid body such that some non-zero 6-DOF velocities cannot be observed on the image plane, by processing the optical flow of each image point.

Moreover, we prove that four feature points are necessary and sufficient to guarantee the recoverability of 6-DOF motions of a rigid body at any position and pose, provided that the four feature points do not belong to the same circular cylinder in the 3-D space. We also exhibit the necessary and sufficient conditions of singularity for any set of $n \geq 3$ feature points. The proof is based on a factorization of the optical flow matrix into the product of two matrices, which makes it easier to study its null space. Singularities will be avoided during a visual tracking task by a proper selection of the feature points: in short, at least four feature points which do not belong to the same circular cylinder, is a sufficient condition to guarantee that singularities will never occur.

6 Acknowledgements

This research was supported, in part, by the Defense Advanced Research Projects Agency, through ARPA Order Number DAAA-21-89C-0001, and by Sandia National Laboratory under contract AC-3752-D. Partial support for Philippe Couvignou was provided by *Régie Nationale des Usines Renault S.A., Direction de la Recherche*, under an exchange program VSNA (*Volontaires Service National Actif*). The views and conclusions expressed in this document are those of the authors, and do not necessarily reflect the official policies, either expressed or implied, of the funding agencies.

References

[Cha90] Chaumette F. *La relation vision-commande: théorie et applications à des tâches robotiques.* PhD thesis, Université de Rennes, France, July 1990.

[Cha91] Chaumette F., Rives P., and Espiau B. Positioning of a robot with respect to an object, tracking it, and estimating its velocity by visual servoing. In *Proc. of the IEEE International Conference on Robotics and Automation*, pages 2248–2253, Sacramento, CA, April 1991.

[Fed90] Feddema J.T. and Lee C.S.G. Adaptive image feature prediction and control for visual tracking with a hand-eye coordinated camera. *IEEE Transactions on Systems, Man and Cybernetics*, Vol.20, No.5:pp 1172–1183, 1990.

[Fed91] Feddema J.T., Lee C.S.G. and Mitchell O.R. Weighted selection of image features for resolved rate visual feedback control. *IEEE Transactions on Robotics and Automation*, Vol.7, No.1:pp 31–47, 1991.

[Has91] Hashimoto K., Kimoto T., Ebine T. and Kimura H. Manipulator control with image-based visual servo. In *Proc. of the IEEE International Conference on Robotics and Automation*, pages 2267–2272, Sacramento, CA, April 1991.

[Jan91] Jang W. and Bien Z. Feature-based visual servoing of an eye-in-hand robot with improved tracking performance. In *Proc. of the IEEE International Conference on Robotics and Automation*, pages 2254–2260, Sacramento, CA, April 1991.

[Pap91a] Papanikolopoulos N. and Khosla P.K. Feature based robotic visual tracking of 3-D translational motion. In *Proc. of the 30th IEEE Conference on Decision and Control*, pages 1877–1882, Brighton, United Kingdom, December 1991.

[Pap91b] Papanikolopoulos N., Khosla P.K. and Kanade T. Vision and control techniques for robotic visual tracking. In *Proc. of the IEEE International Conference on Robotics and Automation*, pages 857–864, Sacramento, CA, 1991.

[Tom92] Tomasi C. and Kanade T. The factorization method for the recovery of shape and motion from image streams. In *Proc. of DARPA Image Understanding Workshop*, San Diego, CA, January 1992.

[Wei87] Weiss L.E., Sanderson A.C. and Neuman C.P. Dynamic sensor-based control of robots with visual feedback. *IEEE Journal of Robotics and Automation*, Vol.3, No.5:pp 404–417, 1987.

A Appendix: Proof of Theorem 1 and Theorem 2

Theorem 1
Let $\mathcal{A}$ be a $m \times p$ rectangular matrix, $\mathcal{B}$ be a $m \times n$ rectangular matrix, and $\mathcal{C}$ be a $n \times p$ rectangular matrix, with $1 < p \leq m \leq n$. Let us assume that $\mathcal{A} = \mathcal{BC}$. Then,
$\text{rank}\,(\mathcal{A}) = p$ *if, and only if,* $\text{rank}(\mathcal{B}) \geq p$, $\text{rank}(\mathcal{C}) = p$, and $\text{Null}(\mathcal{B}) \cap \text{Image}(\mathcal{C}) = \{0\}$.

Proof of Theorem 1
It is a well known result of linear algebra that the sum of the dimensions of the image space and the dimension of the null space of any rectangular matrix of size $N \times M$ is equal to M. Thus, we have:

$$\text{rank}(\mathcal{A}) + \dim \text{Null}(\mathcal{A}) = p, \tag{23}$$
$$\text{rank}(\mathcal{B}) + \dim \text{Null}(\mathcal{B}) = n, \tag{24}$$
$$\text{rank}(\mathcal{C}) + \dim \text{Null}(\mathcal{C}) = p. \tag{25}$$

Another important result in linear algebra is that the rank of a product $\mathcal{BC}$ is always lower than the ranks of the matrices $\mathcal{B}$ and $\mathcal{C}$. Thus,

$$\text{rank}(\mathcal{A}) \leq \text{rank}(\mathcal{B}), \tag{26}$$
$$\text{rank}(\mathcal{A}) \leq \text{rank}(\mathcal{C}). \tag{27}$$

1) Let us assume that $\text{rank}(\mathcal{B}) \geq p$, $\text{rank}(\mathcal{C}) = p$, and $\text{Null}(\mathcal{B}) \cap \text{Image}(\mathcal{C}) = \{0\}$.

Let us show that $\text{Null}(\mathcal{A}) = \{0\}$. Given any vector $\mathbf{x}$ in $\text{Null}(\mathcal{A})$, the vector $\mathcal{C}.\mathbf{x}$ belongs to $\text{Null}(\mathcal{B})$ because $\mathcal{A}.\mathbf{x} = \mathcal{BC}.\mathbf{x} = 0$. However, $\mathcal{C}.\mathbf{x}$ also belongs to $\text{Image}(\mathcal{C})$ and it is assumed that $\text{Null}(\mathcal{B}) \cap \text{Image}(\mathcal{C})$ is reduced to the null vector. Consequently, $\mathcal{C}.\mathbf{x} = 0$ and it follows from $\text{rank}(\mathcal{C}) = p$ and from the equation (25) that $\mathbf{x} = 0$.

Therefore, $\text{Null}(\mathcal{A}) = \{0\}$, and we can conclude from equation (23) that $\text{rank}(\mathcal{A}) = p$.

2) Let us assume that $\text{rank}(\mathcal{A}) = p$.

From the equations (26) and (27), we directly write:

$$p \leq \text{rank}(\mathcal{B}),. \tag{28}$$
$$p \leq \text{rank}(\mathcal{C}) \tag{29}$$

In addition, it follows from equation (25) that $\text{rank}(\mathcal{C}) \leq p$. Therefore, $\text{rank}(\mathcal{C}) = p$.

Now, let us prove that $\text{Null}(\mathcal{B}) \cap \text{Image}(\mathcal{C}) = \{0\}$. Given any vector $\mathbf{x}$ in $\text{Null}(\mathcal{B}) \cap \text{Image}(\mathcal{C})$, we must prove that necessarily, $\mathbf{x} = 0$. We can write $\mathcal{B}.\mathbf{x} = 0$, and also, there exists a vector $\mathbf{y}$ in $\mathbb{R}^p$ such that $\mathbf{x} = \mathcal{C}.\mathbf{y}$. Thus, $\mathcal{A}.\mathbf{y} = \mathcal{B}.\mathbf{x} = 0$, and because $\text{rank}(\mathcal{A}) = p$, $\mathbf{y}$ is necessarily null. Therefore, $\mathbf{x} = 0$ so that $\text{Null}(\mathcal{B}) \cap \text{Image}(\mathcal{C}) = \{0\}$. $\square$

Theorem 2
Let $\mathbf{t}$ and $\mathbf{w}$ be two vectors of $\mathbb{R}^3$, and $\mathbf{O}$ be the origin of the euclidean space $\mathbb{R}^3$. Let us assume

that $\mathbf{w} \neq 0$. Then,
there exists a unique vector $\mathbf{t}_w$ of $\mathbb{R}^3$, a unique scalar $\lambda \in \mathbb{R}$, and a (non-unique) point $\mathbf{C}$, such that

$$\begin{cases} \mathbf{t}_w = \lambda \mathbf{w}, \\ \mathbf{t} + \mathbf{w} \times \mathbf{OM} = \mathbf{t}_w + \mathbf{w} \times \mathbf{CM}, \text{ for all points } \mathbf{M} \in \mathbb{R}^3. \end{cases}$$

Proof of Theorem 2
1) *Existence:*
The vector $\mathbf{t}$ can be uniquely decomposed into:

$$\mathbf{t} = \mathbf{t}_w + \mathbf{t}_{w\perp}$$

where $\mathbf{t}_w$ is parallel to $\mathbf{w}$ and $\mathbf{t}_{w\perp}$ is orthogonal to $\mathbf{w}$. We define $\lambda = \mathbf{t}_w.\mathbf{w}/|\mathbf{w}|^2$, so that

$$\mathbf{t}_w = \lambda \mathbf{w}.$$

Let us characterize the set of points $\mathbf{P}$ in $\mathbb{R}^3$ such that

$$\mathbf{t} + \mathbf{w} \times \mathbf{OP} = \mathbf{t}_w, \tag{30}$$

which is equivalent to:

$$\mathbf{t}_{w\perp} + \mathbf{w} \times \mathbf{OP} = 0. \tag{31}$$

Equation (31) is the equation of a line Δ parallel to $\mathbf{w}$. Let us choose a point $\mathbf{C}$ on Δ. By definition,

$$\mathbf{t}_{w\perp} + \mathbf{w} \times \mathbf{OC} = 0,$$

therefore, for any point $\mathbf{M}$ in $\mathbb{R}^3$, we have:

$$\mathbf{t} + \mathbf{w} \times \mathbf{OM} = \mathbf{t}_w + \mathbf{w} \times \mathbf{CM}.$$

2) *Unicity:* Let us assume that two lines Δ_1 and Δ_2 satisfy Theorem 2. Let us choose two points $\mathbf{C}_1 \in \Delta_1$ and $\mathbf{C}_2 \in \Delta_2$. For all points $\mathbf{M}$ in $\mathbb{R}^3$, we have:

$$\mathbf{t} + \mathbf{w} \times \mathbf{OM} = \mathbf{t}_w + \mathbf{w} \times \mathbf{C}_1\mathbf{M} = \mathbf{t}_w + \mathbf{w} \times \mathbf{C}_2\mathbf{M}.$$

It follows that

$$\mathbf{w} \times \mathbf{C}_1\mathbf{C}_2 = 0,$$

and therefore, the vector $\mathbf{C}_1\mathbf{C}_2$ is parallel to $\mathbf{w}$. Consequently, the two lines Δ_1 and Δ_2 are identical. □